T-solution
Leader in Electrics & Automation

META MEC

CONTACTORS & THERMAL OVERLOAD RELAYS

Meta - MEC Series
CONTACTORS & THERMAL OVERLOAD RELAYS

LG Industrial Systems
www.lgis.com

The long Life Meta-MEC

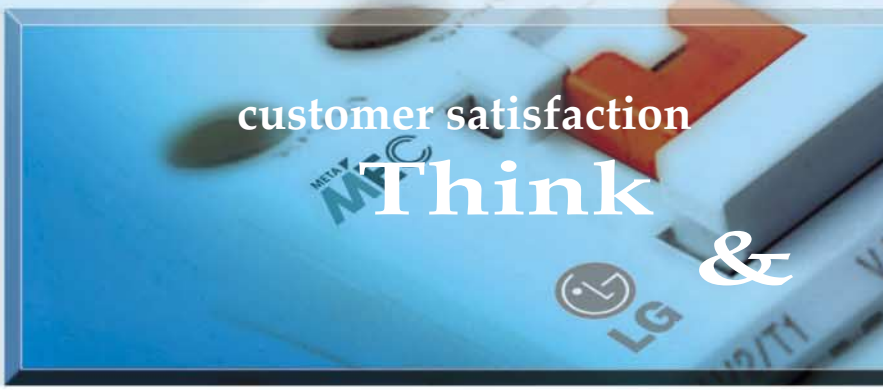

- *Full−series from 9~800AF*
- *The long life*
- *Certification and Approval from authorized test lab*

- **Standard :** IEC 60947, UL 508, VDE 0660, EN 60947, BS 5424, KS C 4504
- **Certification & Approval :** CE, UL / CSA, Lloyd Register, Korea Register, KS, ISO 14001, ISO 9001(Including proceedings), TSE, PSE

GMC Type

CONTENTS

1. Selection guide Technical information

- 3-pole Contactors description 4~5
- 3-pole Contactors and Thermal overload relays 6~7
- 4-pole Contactors 8
- Type designation 9
- 3 & 4-pole Contactors technical information 10
- Contactor relays 22~23
- Accessories 24~26
- Reversing contactors 27~28
- Latching contactors 29
- 2-pole AC magnetic contactor 30~31
- Contactors with delay open device 32
- Thermal overload relays 33~37
- Thermal overload relays (class20) 38~39
- Enclosures for direct starters 40~43

2. Dimensions and wiring diagrams

- 3-pole Contactors 44~47
- Direct starters 48~49
- 4-pole contactors 50~52
- Contactor relays 53~54
- Auxiliary contact blocks 55
- Reversing contactors 56~61
- Reversing contactors with TOR 62~64
- Latching contactors 65~66
- Contactors with delayed open device 67
- Thermal overload relays 68~69
- Thermal overload relays (class20) 70~71

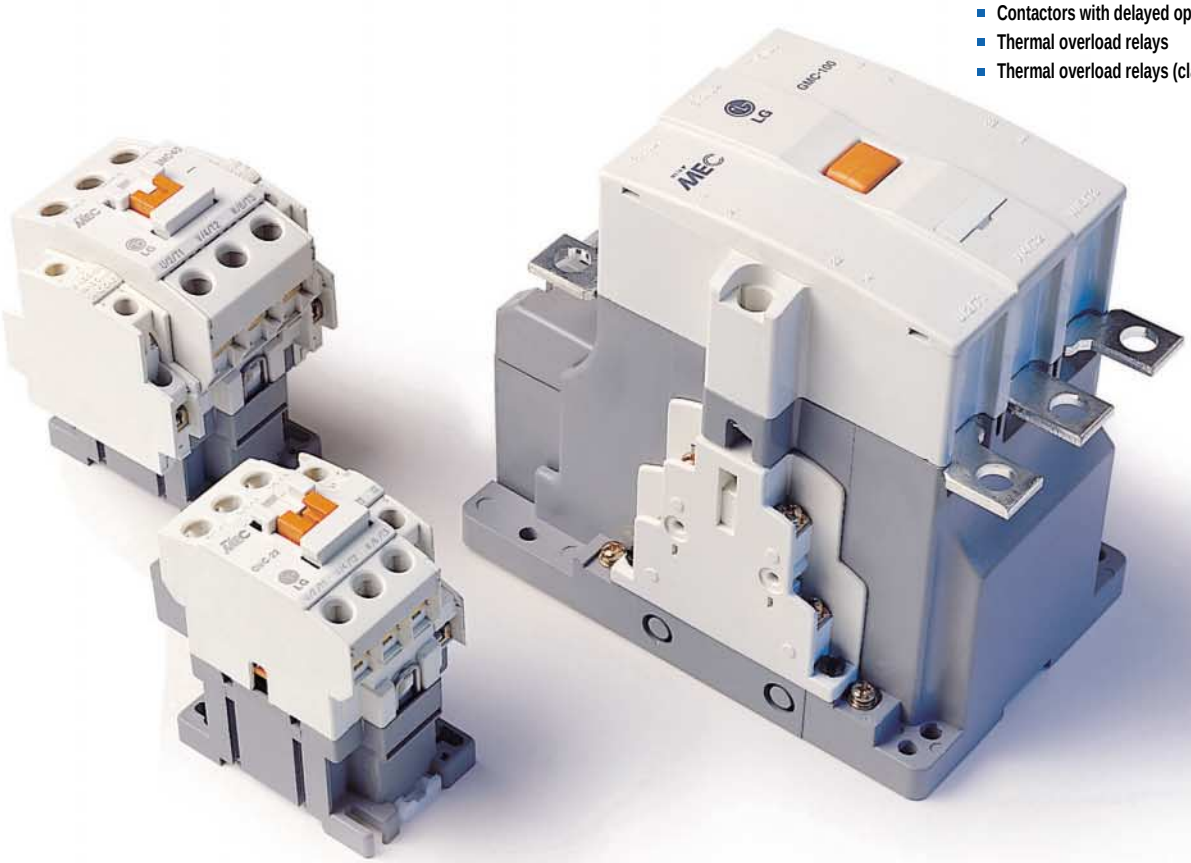

3-pole Contactors description

GMC-9~85

● Magnetic contactors

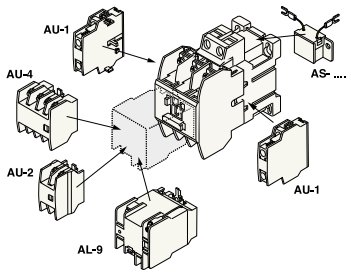

● Thermal overload relays

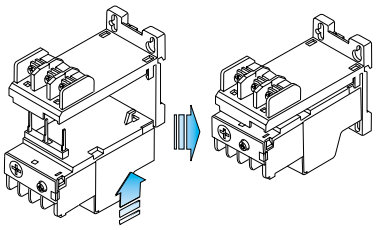

Easy to use and safe structure

- Finger-proof in magnetic contactors and thermal overload relays (Standard)
- Modulized auxiliary contacts are easy to attach and detach from the magnetic contectors

3 Frame sizes
3 external dimensions in magnetic contactors and TOR.

Direct mounting type TOR.
An additional bracket is not necessary

Two ways mounting
Din-rail 35mm mounting or screw mounting (Push or pull to uninstall from a Din-rail)

GMC-100~800

Easy to use

- Auxiliary contact can be replaced without uninstall the magnetic contactors
- Auxiliary contact is common use from GMC-100~800

Easy to replace the operating coil

- Drawable the cassette type operating coil without uninstall the magnetic contactors

Free voltage in operating coil voltage (GMC 100~400)

- 100~240V, AC and DC common use, 50Hz and 60Hz common use

Various accessories

- Auxiliary contact
- Mechanical interlock unit
- Mechanical latch unit
- Delayed opening unit

Easy to wire

- Adopt the clamp terminal (Standard)

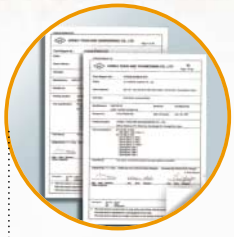

Pass the EMC test

- Safety in surge and electro-microwave

3-pole Contactors and Thermal overload relays

Type				GMC-9	GMC-12	GMC-18	GMC-22	GMC-32	GMC-40	GMC-50	GMC-65	GMC-75	GMC-85
IEC-60947 CE	AC1 duty			20A	20A	25A	32A	50A	60A	80A	100A	110A	135A
	AC3 duty		200~240V	2.5kW 11A	3.5kW 13A	4.5kW 18A	5.5kW 22A	7.5kW 32A	11kW 40A	15kW 55A	18.5kW 65A	22kW 75A	25kW 85A
			380~440V	4kW 9A	5.5kW 12A	7.5kW 18A	11kW 22A	15kW 32A	18.5kW 40A	22kW 50A	30kW 65A	37kW 75A	45kW 85A
			500~550V	4kW 7A	7.5kW 12A	7.5kW 13A	15kW 22A	18.5kW 28A	22kW 32A	30kW 43A	33kW 60A	37kW 64A	45kW 75A
			690V	4kW 5A	7.5kW 9A	7.5kW 9A	15kW 18A	18.5kW 20A	22kW 23A	30kW 28A	33kW 35A	37kW 42A	45kW 45A
UL 508	Rated thermal current (Ith)			20A	25A	30A	32A	45A	50A	70A	80A	90A	100A
UL, UL	AC Motor	Unipolar single phase	115V	0.5 HP	0.5 HP	1 HP	2 HP	2 HP	3 HP	3 HP	5 HP	5 HP	7.5 HP
			230V	1 HP	2 HP	3 HP	3 HP	5 HP	5 HP	7.5 HP	10 HP	15 HP	15 HP
		Three phase	200V	2 HP	3 HP	5 HP	7.5 HP	7.5 HP	10 HP	10 HP	15 HP	20 HP	25 HP
			230V	2 HP	3 HP	5 HP	7.5 HP	10 HP	10 HP	15 HP	20 HP	25 HP	30 HP
			460V	5 HP	7.5 HP	10 HP	10 HP	20 HP	25 HP	30HP	40 HP	50 HP	50 HP
			575V	7.5 HP	10 HP	15 HP	15 HP	20 HP	25 HP	30 HP	40 HP	50 HP	50 HP
Endurance (×10,000 operations)			Electrical	250	250	250	250	200	200	200	200	200	200
			Mechanical	2500	2500	2500	2500	1500	1500	1000	1000	1000	1000
Auxiliary contact			Standard	1NO 1NC	1NO 1NC	1NO 1NC	1NO 1NC	2NO 2NC	2NO 2NC	2NO 2NC	2NO 2NC	2NO 2NC	2NO 2NC
			Side mounting	AU-1	AU-1	AU-1	AU-1	AU-1	AU-1	AU-1	AU-1	AU-1	AU-1
			Top mounting	AU-2, AU-4	AU-2, AU-4	AU-2, AU-4	AU-2, AU-4	AU-2, AU-4	AU-2, AU-4	AU-2, AU-4	AU-2, AU-4	AU-2, AU-4	AU-2, AU-4
Mounting options				Rail DIN Torn./screw	Rail DIN Torn./screw	Rail DIN Torn./screw	Rail DIN Torn./screw	Rail DIN Torn./screw	Rail DIN Torn./screw	Rail DIN Torn./screw	Rail DIN Torn./screw	Rail DIN Torn./screw	Rail DIN Torn./screw
External dimension(mm) (W×H ×D)				44x80x86.8	44x80x86.8	44x80x86.8	44x80x86.8	68x82x94.6	68x82x94.6	94x123.5x117.4	94x123.5x117.4	94x123.5x117.4	94x123.5x117.4
Mounting dimension(mm)	(Width×Height)			30~35x48~59 35x60	30~35x48~59 35x60	30~35x48~59 35x60	30~35x48~59 35x60	30~35x48~59 35x60	30~35x48~59 35x60	100x50~60 100x60	100x50~60 100x60	100x50~60 100x60	100x50~60 100x60
Application	Contactors	DC Coil		GMD-9	GMD-12	GMD-18	GMD-22	GMD-32	GMD-40	GMD-50	GMD-65	GMD-75	GMD-85
		Reversing		GMC-9R	GMC-12R	GMC-18R	GMC-22R	GMC-32R	GMC-40R	GMC-50R	GMC-65R	GMC-75R	GMC-85R
		Latching		GMC-9L	GMC-12L	GMC-18L	GMC-22L	GMC-32L	GMC-40L	GMC-50L	GMC-65L	GMC-75L	GMC-85L
	Direct starters	Standard		GMS-9	GMS-12	GMS-18	GMS-22	GMS-32	GMS-40	GMS-50	GMS-65	GMS-75	GMS-85
		Reversing		GMS-9R	GMS-12R	GMS-18R	GMS-22R	GMS-32R	GMS-40R	GMS-50R	GMS-65R	GMS-75R	GMS-85R
		Differential		GMS-9K	GMS-12K	GMS-18K	GMS-22K	GMS-32K	GMS-40K	GMS-50K	GMS-65K	GMS-75K	GMS-85K
		Enclosed	(Metal)	GMW-9	GMW-12	GMW-18	GMW-22	GMW-32	GMW-40	GMW-50	GMW-65	GMW-75	GMW-85
			(Plastic)	GMW-9M	GMW-12M	GMW-18M	GMW-22M	-	-	-	-	-	-
		Push button	(Metal)	GMW-9B	GMW-12B	GMW-18B	GMW-22B	GMW-32B	GMW-40B	GMW-50B	GMW-65B	GMW-75B	GMW-85B
			(Plastic)	GMW-9MB	GMW-12MB	GMW-18MB	GMW-22MB	-	-	-	-	-	-
Thermal overload relays		Standard		GTH-22	GTH-22	GTH-22	GTH-22	GTH-40	GTH-40	GTH-85	GTH-85	GTH-85	GTH-85
		Differential		GTK-22	GTK-22	GTK-22	GTK-22	GTK-40	GTK-40	GTK-85	GTK-85	GTK-85	GTK-85
		3 heaters		GTH-22/3	GTH-22/3	GTH-22/3	GTH-22/3	GTH-40/3	GTH-40/3	GTH-85/3	GTH-85/3	GTH-85/3	GTH-85/3
		Delayed open		GTH-22/L	GTH-22/L	GTH-22/L	GTH-22/L	GTH-40/L	GTH-40/L	GTH-85/L	GTH-85/L	GTH-85/L	GTH-85/L
		Separate mounting		GTH-22H	GTH-22H	GTH-22H	GTH-22H	GTH-40H	GTH-40H	GTH-85H	GTH-85H	GTH-85H	GTH-85H

CONTACTORS & THERMAL OVERLOAD RELAYS

Type			GMC-100	GMC-125	GMC-150	GMC-180	GMC-220	GMC-300	GMC-400	GMC-600	GMC-800
IEC-60947 CE	AC1 duty		150A	150A	200A	230A	260A	350A	420A	660A	800A
	AC3 duty	200~240V	30kW 105A	37kW 125A	45kW 150A	55kW 180A	75kW 250A	90kW 300A	125kW 400A	190kW 630A	220kW 800A
		380~440V	55kW 105A	60kW 120A	75kW 150A	90kW 180A	132kW 250A	160kW 300A	220kW 400A	330kW 630A	440kW 800A
		500~550V	55kW 85A	60kW 90A	90kW 140A	110kW 180A	132kW 200A	160kW 250A	225kW 350A	330kW 500A	500kW 720A
		690V	55kW 65A	60kW 70A	90kW 100A	110kW 120A	132kW 150A	200kW 220A	250kW 300A	330kW 420A	500kW 630A
UL 508	Rated thermal current (Ith)		160A	160A	210A	230A	275A	350A	450A	660A	900A
UL c UL	AC Motor Unipolar single phase	115V	7.5HP	10HP	15HP	15HP	15HP				
		230V	15HP	20HP	25HP	30HP	40HP				
	Three phase	200V	30HP	40HP	40HP	60HP	60HP	100HP	125HP	150HP	200HP
		230V	30HP	40HP	50HP	60HP	75HP	100HP	150HP	200HP	300HP
		460V	60HP	75HP	100HP	125HP	150HP	200HP	300HP	400HP	600 HP
		575V	60HP	75HP	100HP	125HP	150HP	200HP	300HP	400HP	600HP
Endurance (×10,000 operations)		Electrical	100	100	100	100	100	100	50	50	50
		Mechanical	500	500	500	500	500	500	500	500	500
Auxiliary contact		Standard	2NO2NC	2NO2NC	2NO2NC	2NO2NC	2NO2NC	2NO2NC	2NO2NC	2NO2NC	2NO2NC
		Side mounting	AU-100	AU-100	AU-100	AU-100	AU-100	AU-100	AU-100	AU-100	AU-100
		Top mounting	-	-	-	-	-	-	-	-	-
Mounting options			Torn./screw	Torn./screw	Torn./screw	Torn./screw	Torn./screw	Torn./screw	Torn./screw	Torn./screw	Torn./screw
External dimension(mm) (W×H ×D)			100x157.4x146.5	100x157.4x146.5	120x166x157	138x203x181	138x203x181	163x243x198	163x243x198	285x290x242	285x290x242
Mounting dimension(mm)	(Width×Height)		80x110 90x125	80x100 90x125	100x125~130	45x190 120x190	45x190 120x190	50x210 60x220 145x225	50x210 60x220 145x225	250x250	250x250
Application	Contactors	DC Coil	AC / DC common coil								
		Reversing	GMC-100R	GMC-125R	GMC-150R	GMC-180R	GMC-220R	GMC-300R	GMC-400R	-	-
		Latching	GMC-100L	GMC-125L	GMC-150L	GMC-180L	GMC-220L	GMC-300RL	GMC-400L	-	-
	Direct starters	Standard	GMS-100	GMS-125	GMS-150	GMS-180	GMS-220	GMS-300	GMS-400	GMS-600	GMS-800
		Reversing	GMS-100R	GMS-125R	GMS-150R	GMS-180R	GMS-220R	GMS-300R	GMS-400R	-	-
		Differential	GMS-100K	GMS-125K	GMS-150K	GMS-180K	GMS-220K	GMS-300K	GMS-400K	GMS-600K	GMS-800K
		Enclosed (Metal)	GMW-100	GMW-125	GMW-150	GMW-180	GMW-220	-	-	-	-
		Enclosed (Plastic)	-	-	-	-	-	-	-	-	-
		Push button (Metal)	-	-	-	-	-	-	-	-	-
		Push button (Plastic)	-	-	-	-	-	-	-	-	-
Thermal overload relays		Standard	GTH-100	GTH-100	GTH-150	GTH-220	GTH-220	GTH-400	GTH-400	GTH-600	GTH-600
		Differential	GTK-100	GTK-100	GTK-150	GTK-220	GTK-220	GTK-400	GTK-400	GTK-600	GTK-600
		3 heaters	GTH-100/3	GTH-100/3	GTH-150/3	GTH-220/3	GTH-220/3	GTH-400/3	GTH-400/3	GTH-600/3	GTH-600/3
		Delayed open	GTH-100/L	GTH-100/L	GTH-150/L	GTH-220/L	GTH-220/L	GTH-400/L	GTH-400/L	GTH-600/L	GTH-600/L
		Separate mounting	-	-	-	GTH-220H	GTH-220H	GTH-400H	GTH-400H	GTH-600H	GTH-600H

4-pole Contactors

3 frame sizes
3 external dimensions from GMC-100/4~800/4

Flexibility
Common accessories for 3-pole and 4-pole

● GMC-9/4~85/4

Type			GMC-9/4	GMC-12/4	GMC-18/4	GMC-22/4	GMC-32/4	GMC-40/4	GMC-50/4	GMC-65/4	GMC-75/4	GMC-85/4
IEC-60947	AC-1	200~240V	7.5kW 20A	7.5kW 20A	10kW 25A	11kW 32A	18kW 50A	21kW 60A	29kW 80A	34kW 100A	38kW 110A	40kW 135A
CE		380~440V	13kW 20A	13kW 20A	17kW 25A	20kW 32A	31kW 50A	37kW 60A	50kW 80A	59kW 100A	66kW 110A	69kW 135A
		500~550V	17kW 20A	17kW 20A	22kW 25A	23kW 32A	41kW 50A	49kW 60A	65kW 80A	74kW 100A	82kW 110A	87kW 135A
		690V	22kW 20A	22kW 20A	30kW 25A	34kW 32A	54kW 50A	65kW 60A	56kW 80A	102kW 100A	114kW 110A	120kW 135A
Endurance		Electrical	200	200	170	170	170	170	150	150	150	150
(x10,000 operation)		Mechanical	2000	2000	2000	2000	2000	2000	1000	1000	1000	1000
Auxiliary contacts		Standard	-	-	-	-	-	-	-	-	-	-
		Side mounting	AU-1	AU-1	AU-1	AU-1	AU-1	AU-1	AU-1	AU-1	AU-1	AU-1
		Top mounting	AU-2,4	AU-2,4	AU-2,4	AU-2,4	AU-2,4	AU-2,4	AU-2,4	AU-2,4	AU-2,4	AU-2,4
Mounting options			Rail DIN Screw	Rail DIN Screw	Rail DIN Screw	Rail DIN Screw	Rail DIN Screw	Rail DIN Screw	Rail DIN Screw	Rail DIN Screw	Rail DIN Screw	Rail DIN Screw
External dimensions (mm) (W×H×D)			44×80×86.8	44×80×86.8	48×80×86.8	48×80×86.8	59×83.5×94.5	59×83.5×94.5	91×122×118	91×122×118	91×122×118	91×122×118
Mounting dimensions (Width×Height)			35×60	35×60	35×60	35×60	42×60	42×60	81×100	81×100	81×100	81×100
DC Contactors			GMD-9/4	GMD-12/4	GMD-18/4	GMD-22/4	GMD-32/4	GMD-40/4	GMD-50/4	GMD-65/4	GMD-75/4	GMD-85/4

● GMC-100/4~800/4

Type			GMC-100/4	GMC-125/4	GMC-150/4	GMC-180/4	GMC-220/4	GMC-300/4	GMC-400/4	GMC-600/4	GMC-800/4
IEC-60947	AC-1	200~240V	58kW 150A	64kW 155A	76kW 200A	85kW 230A	100kW 260A	120kW 350A	152kW 420A	280kW 660A	350kW 800A
CE		380~440V	100kW 150A	111kW 155A	132kW 200A	150kW 230A	175kW 260A	210kW 350A	262kW 420A	500kW 660A	600kW 800A
		500~550V	132kW 150A	139kW 155A	173kW 200A	190kW 230A	220kW 260A	270kW 350A	345kW 420A	655kW 660A	750kW 800A
		690V	174kW 150A	191kW 155A	228kW 200A	260kW 230A	300kW 260A	370kW 350A	457kW 420A	860kW 660A	1000kW 800A
Endurance		Electrical	100	100	100	100	100	100	70	70	70
(x10,000 operation)		Mechanical	500	500	500	500	500	500	500	500	500
Auxiliary contacts		Standard	2NO 2NC	2NO 2NC	2NO 2NC	2NO 2NC	2NO 2NC	2NO 2NC	2NO 2NC	2NO 2NC	2NO 2NC
		Side mounting	AU-100	AU-100	AU-100	AU-100	AU-100	AU-100	AU-100	AU-100	AU-100
		Top mounting	-	-	-	-	-	-	-	-	-
Mounting options			Screw	Screw	Screw	Screw	Screw	Screw	Screw	Screw	Screw
External dimensions (mm) (W×H×D)			175×203×180	175×203×180	175×203×180	175×203×180	175×203×180	208×243×199	208×243×199	346×310×242	346×310×242
Mounting dimensions (Width×Height)			120×190	120×190	120×190	120×190	120×190	145×225	145×225	308×270	308×270
DC Contactors			AC/DC Common coil								

Type designation

Magnetic contactors

GM — C — 22 / 4 — AC220V

GM — Magnetic contactors

C — Type

C	AC Coil
D	DC Coil

22 — Rated current (AC 440V basis)

9	9A	100	105A
12	12A	125	120A
18	18A	150	150A
22	22A	180	180A
32	32A	220	250A
40	40A	300	300A
50	50A	400	400A
65	65A	600	630A
75	75A	800	800A
85	85A		

4 — Pole

-	3pole
4	4pole

AC220V — Operational voltage

AC 24~600V
DC 12~250V

Thermal overload relays

GT — H — 22 — H / 3 — L — 5A

GT — Overload relay

Thermal overload relay

H — Application

H	Standard
K	Differential

22 — Ampere frame

22	0.1~22A
40	4~40A
85	7~85A
100	34~120A
150	34~150A
220	65~240A
400	85~400A
600	200~800A

H — Mounting

-	On contactor
H	Separate mounting

3 — Heater

-	2 heater
3	3 heater

L — Application

-	Standard
L	Delay opening

5A — Rated current

Low AF		High AF	
0.14	0.1~0.16	41	34~50
0.21	0.16~0.25	48	39~57
0.33	0.25~0.4	56	43~65
0.52	0.4~0.63	67	54~80
0.82	0.63~1	80	65~100
1.3	1~1.6	107	85~125
2.1	1.6~2.5	130	100~160
3.3	2.5~4	150	120~180
5	4~6	200	160~240
6.5	5~8	250	200~300
7.5	6~9	350	260~400
8.5	7~10	500	400~600
11	9~13	660	520~800
15	12~18		
19	16~22		
22	18~26		
30	24~36		
34	28~40		
42	34~50		
55	45~65		
65	54~75		
74	63~85		

Contactor relays

GMR — 4 — D — AC220V

GMR — Contactor relay

4

Type	No. Contacts
4	4 Contacts
6	6 Contacts
8	8 Contacts

D — Operation current

-	AC coil
D	DC coil

AC220V — Operational voltage

AC 24~600V
DC 12~250V

Auxiliary contacts

AU — 100

AU — Auxiliary contacts

100

Type	No. of contact	Mounting	Applied MC
2	2 Contacts	Top	GMC-9~85
4	4 Contacts		
1	2 Contacts	Side	
100	2 Contacts	Side	GMC-100~800

Mechanical Interlock unit

AR — 100 — V

AR — Interlock unit

100

Type	Applied MC
9	GMC-9~85
100	GMC-100~150
180	GMC-180~400
600	GMC-600~800

V — Position

-	Horizental
D	Vertical

3 & 4-pole Contactors technical information

Ratings of Contactors and Direct starters

Type		Rating																AC1 (Ith)
Contactors	Direct Starters	AC3						AC2						AC4				
		200~220V		380~440V		500~550V		200~220V		380~440V		500~550V		200~220V		380~440V		
		kW	A	kW	A	kW	A	kW	A	kW	A	kW	A	kW	A	kW	A	A
GMC - 9	GMS - 9	2.5	11	4	9	4	7	2.5	11	4	9	4	7	1.5	8	2.2	6	20
GMC - 12	GMS - 12	3.5	13	5.5	12	7.5	12	3.5	13	5.5	12	7.5	12	2.2	11	4	9	20
GMC - 18	GMS - 18	4.5	18	7.5	18	7.5	13	4.5	18	7.5	18	7.5	13	3.7	18	4	9	25
GMC - 22	GMS - 22	5.5	22	11	22	15	22	5.5	22	11	22	15	22	3.7	18	5.5	13	32
GMC - 32	GMS - 32	7.5	32	15	32	18.5	28	7.5	32	15	32	18.5	28	4.5	20	7.5	17	50
GMC - 40	GMS - 40	11	40	18.5	40	22	32	11	40	18.5	40	22	32	5.5	25	11	24	60
GMC - 50	GMS - 50	15	55	22	50	30	43	15	55	22	50	30	43	7.5	35	15	32	80
GMC - 65	GMS - 65	18.5	65	30	65	37	60	18.5	65	30	65	37	60	11	50	22	47	100
GMC - 75	GMS - 75	22	75	37	75	45	64	22	75	37	75	45	64	13	55	25	52	110
GMC - 85	GMS - 85	25	85	45	85	45	75	25	85	45	85	45	75	15	65	30	62	135
GMC - 100	GMS - 100	30	105	55	105	55	85	30	105	55	105	55	85	19	80	37	75	150
GMC - 125	GMS - 125	37	125	60	120	60	90	37	125	60	120	60	90	22	93	45	90	150
GMC - 150	GMS - 150	45	150	75	150	90	140	45	150	75	150	90	140	30	125	55	110	200
GMC - 180	GMS - 180	55	180	90	180	110	180	55	180	90	180	110	180	37	150	75	150	230
GMC - 220	GMS - 220	75	220	132	220	132	200	75	220	132	220	132	200	45	180	90	180	260
GMC - 300	GMS - 300	90	300	160	300	160	250	90	300	160	300	160	250	55	220	110	220	350
GMC - 400	GMS - 400	125	400	220	400	225	350	125	400	220	400	225	350	75	300	150	300	420
GMC - 600	GMS - 600	190	630	330	630	330	500	190	630	330	630	330	500	110	400	200	400	660
GMC - 800	GMS - 800	220	800	440	800	500	720	220	800	440	800	500	720	160	630	300	630	800

Ratings of Auxiliary contacts

Type	Rated current (A)																AC1 (Ith)
	AC 15				DC 13				AC 12				DC 12				
	110V	120V	440V	550V	24V	48V	110V	220V	110V	220V	440V	550V	24V	48V	110V	220V	A
GMC(D)-9~22	6	3	1.5	1.2	3	1.5	0.55	0.27	10	8	5	5	5	3	2.5	1	16
GMC(D)-32~85	6	3	1.5	1.2	3	1.5	0.55	0.27	10	8	5	5	5	3	2.5	1	16
GMC-100~800	6	5	3	3	6	3	1.2	0.2	10	10	5	5	5	3	1.5	0.25	16

Contact arrangement

Type	Standard	Option
GMC(D)-9~22	1NO 1NC	4NO, 3NO1NC, 2NO2NC, 1NO3NC
GMC(D)-32~85	2NO 2NC	4NO, 3NO1NC, 2NO2NC, 1NO3NC
GMC-100(/4)~800(/4)	2NO 2NC	2NO 2NC

Operating coil ratings

9 ~ 85A

Type	AC coil		DC coil
	50Hz	60Hz	DC
GMC(D) - 9(/4) ~ 85(/4)	24V	24V	12V
	42V	48V	20V
	48V	110V	24V
	100V	120V	48V
	110V	208V	60V
	220V	220V	80V
	240V	240V	100V
	380V	277V	110V
	400V	380V	125V
	415V	440V	200V
	440V	480V	220V
	500V	600V	250V
	550V	-	-

100 ~ 800A

Type	Rated voltage	AC / DC common coil	
		50Hz/60Hz	DC
GMC - 100(/4) ~ 400(/4)	24V *	24~25V	24V
	48V *	48~50V	48V
	100~200V	100~240V	100~220V
	300V	265~347V	-
	400V	380~450V	-
	500V	440~575V	-
GMC - 600(/4) ~ 800(/4)	100V	100~127V	100~110V
	200V	200~240V	200~220V
	300V	265~347V	-
	400V	380~450V	-
	500V	440~575V	

Note) * 24 and 48V rated voltage are available in GMC-100~220

Operating limits

When the operating coil is in the energised state an operating tolerance of between 85~110% of the coil's rated voltage is permitted, at temperatures up to 40℃ at standard operating frequency. Operation out with the above may cause deterioration to electrical insulation and mechanical operation.

Selections of coil

In GMC-9~85 contactors, 50Hz coil and 60Hz coil are separated.
But in GMC-100~800 contactors, the coils are AC/DC common use. (under DC 220V)

Characteristics of AC coil

AC 220V

Type	Coil consumption (VA)		Thermal dissipation (W)	Operational voltage(V)		Coil current (mA)	Operational time (ms)	
	Inrush	Holding		Pick-up	Drop-out		Closing	Opening
GMC - 9(/4)~22(/4)	95	9	2	141~156(142~157)*	105~125(112~132)*	41(36)	10~17	6~9
GMC - 32(/4), 40(/4)	95	9	2	150~165(151~166)*	110~130(117~137)*	41(36)	11~19	6~10
GMC - 50(/4)~85(/4)	220	17	5	145~160(146~161)*	100~120(107~127)*	77(68)	16~25	8~15
GMC - 100, 125	298	12.3	4.4	77	48	56	30~34	63~67
GMC - 150	298	12.3	4.4	77	48	56	37~41	47~52
GMC - 180, 200	380	11.6	4.7	77	48	53	45	45
GMC - 100(/4)~220(/4)	380	11.6	4.7	77	48	53	45	45
GMC - 300(/4), 400(/4)	571	14	5	77	48	64	45~50	48~52
GMC - 600(/4), 800(/4)	1000	29	7.8	150	91	132	66~69	55

Note) 1. Average values. 2. ( )* values for 50Hz.

AC 110V

Type	Coil consumption (VA)		Thermal dissipation (W)	Operational voltage(V)		Coil current (mA)	Operational time (ms)	
	Inrush	Holding		Pick-up	Drop-out		Closing	Opening
GMC - 9(/4)~22(/4)	95	9	2	75~85(74~84)*	55~65(54~64)*	73(73)*	11~18	6~9
GMC - 32(/4), 40(/4)	95	9	2	75~85(74~84)*	55~65(54~64)*	73(73)*	13~20	6~9
GMC - 50(/4)~85(/4)	220	17	5.5	68~78(67~77)*	40~50(39~49)*	154(154)*	16~25	9~16
GMC - 100, 125	162	9.8	3.1	77	48	89	46~50	49~53
GMC - 150	162	12.2	3	77	48	111	56~60	44~48
GMC - 180, 200	220	9.1	3.4	77	48	83	60	41
GMC - 100(/4)~220(/4)	220	9.1	3.4	77	48	83	60	41
GMC - 300(/4), 400(/4)	393	14	4.4	77	48	128	64~68	43~47
GMC - 600(/4), 800(/4)	1000	17	6.3	77	48	155	66~70	45~49

Note) 1. Average values. 2. ( )* values for 50Hz.

Characteristics of DC coil

DC 110V

Type	Coil consumption(VA)		Time contant (ms)	Operational voltage(V)		Coil current (mA)	Operational time (ms)	
	Inrush	Holding		Pick-up	Drop-out		Closing	Opening
GMD - 9(/4)~22(/4)	9	9	50	60~75	15~35	82	45~55	8~15
GMD - 32(/4), 40(/4)	9	9	50	60~75	15~35	82	45~55	8~15
GMD - 50(/4)~85(/4)	220	5	-	65~80	15~35	46	20~30	13~20

Note) 1. Average values.

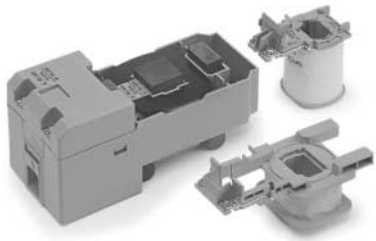

Performance of the Magnetic Contactors

Type	Rated voltage (V)	Rated current (A)	Short circuit max. current	Breaking capacity	Cycles per hour at AC3	Endurance (×10,000 operations)		Performance Indicate
						Mechanical	Electrical	
GMC - 9	220	11	132	110	1800	2500	250	AC3 · 1 · 0-0
	440	9	108	90				
GMC - 12	220	13	156	130	1800	2500	250	AC3 · 1 · 0-0
	440	12	144	120				
GMC - 18	220	18	216	180	1800	2500	250	AC3 · 1 · 0-0
	440	18	216	180				
GMC - 22	220	22	264	220	1800	2500	250	AC3 · 1 · 0-0
	440	22	264	220				
GMC - 32	220	32	385	320	1800	1500	200	AC3 · 1 · 0-0
	440	32	385	320				
GMC - 40	220	40	480	400	1800	1500	200	AC3 · 1 · 0-0
	440	40	480	400				
GMC - 50	220	55	660	550	1200	1000	200	AC3 · 1 · 0-0
	440	50	600	500				
GMC - 65	220	65	780	650	1200	1000	200	AC3 · 1 · 0-0
	440	65	780	650				
GMC - 75	220	75	900	750	1200	1000	200	AC3 · 1 · 0-0
	440	75	900	750				
GMC - 85	220	80	960	800	1200	1000	200	AC3 · 1 · 0-0
	440	80	960	800				
GMC - 100	220	105	1050	1050	1200	500	100	AC3 · 1 · 1-0
	440	105	1050	1050				
GMC - 125	220	125	1250	1250	1200	500	100	AC3 · 1 · 1-0
	440	120	1200	1200				
GMC - 150	440	150	1500	1500	1200	500	100	AC3 · 1 · 1-0
	440	150	1500	1500				
GMC - 180	220	180	1800	1800	1200	500	100	AC3 · 1 · 1-0
	440	180	1800	1800				
GMC - 220	220	220	2200	2200	1200	500	100	ACC3 · 1 · 1-0
	440	220	2200	2200				
GMC - 300	220	300	3000	3000	1200	500	100	AC3 · 1 · 1-0
	440	300	3000	3000				
GMC - 400	220	400	4000	4000	1200	500	50	AC3 · 1 · 1-1
	440	400	4000	4000				
GMC - 600	220	630	6300	6300	1200	500	50	ACC3 · 1 · 1-1
	440	630	6300	6300				
GMC - 800	220	800	8000	8000	1200	500	50	AC3 · 1 · 1-1
	440	800	8000	8000				

Test duty of the electrical endurance (AC3)

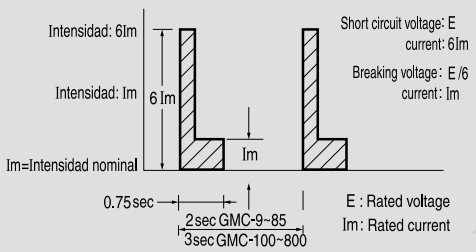

Test duty of the electrical endurance (AC4)

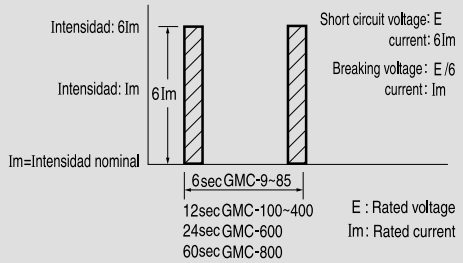

Contactor selection for star-delta combination

Ratings for star-delta use Contactor

Start method	Start (Star contactors)				Operate (Delta contactor)		
	Start current	Torque	Full load current	Contact voltage	Full load current	Contact current	Contact voltage
Direct	6Im	1.5T	6Im	Em/√3	Im	Im	Em/√3
Star - delta	2Im	0.5T	2Im	Em/√3	Im	Im/√3	Em

Contactor selection for star-delta use

Motor ratings		200~220V			380~480V		
(kW)	(HP)	Start use(MCs)	Operate use(MCD)	Power(MCM)	Start use(MCs)	Operate use(MCD)	Power(MCM)
5.5	7.5	GMC-22	GMC-22	GMC-22	GMC-22	GMC-22	GMC-22
7.5	10	GMC-22	GMC-40	GMC-40	GMC-22	GMC-22	GMC-22
11	10	GMC-32	GMC-40	GMC-40	GMC-22	GMC-22	GMC-22
15	20	GMC-32	GMC-50	GMC-50	GMC-22	GMC-32	GMC-32
18.5	25	GMC-40	GMC-50	GMC-50	GMC-22	GMC-40	GMC-40
22	30	GMC-40	GMC-65	GMC-65	GMC-32	GMC-40	GMC-40
30	40	GMC-50	GMC-85	GMC-85	GMC-40	GMC-50	GMC-50
37	50	GMC-65	GMC-100	GMC-100	GMC-40	GMC-65	GMC-65
45	50	GMC-65	GMC-125	GMC-125	GMC-40	GMC-65	GMC-65
55	60	GMC-85	GMC-150	GMC-150	GMC-50	GMC-85	GMC-85
75	100	GMC-100	GMC-180	GMC-180	GMC-65	GMC-100	GMC-100
90	125	GMC-125	GMC-220	GMC-220	GMC-85	GMC-125	GMC-125
110	125	GMC-150	GMC-300	GMC-300	GMC-100	GMC-150	GMC-150
132	150	GMC-220	GMC-400	GMC-400	GMC-100	GMC-180	GMC-180
160	200	GMC-220	GMC-400	GMC-400	GMC-125	GMC-220	GMC-220
250	300	GMC-400	GMC-600	GMC-600	GMC-220	GMC-400	GMC-400
300	400	-	-	-	GMC-300	GMC-400	GMC-400

Note) 1. Above selection is made under AC3 standard squirrel cage motor use basis.
The selection may be changed according to the motor class or manufacturer
2. The motor start time is within 15sec
3. When you use phase advanced condenser, consider the inrush current for selection.

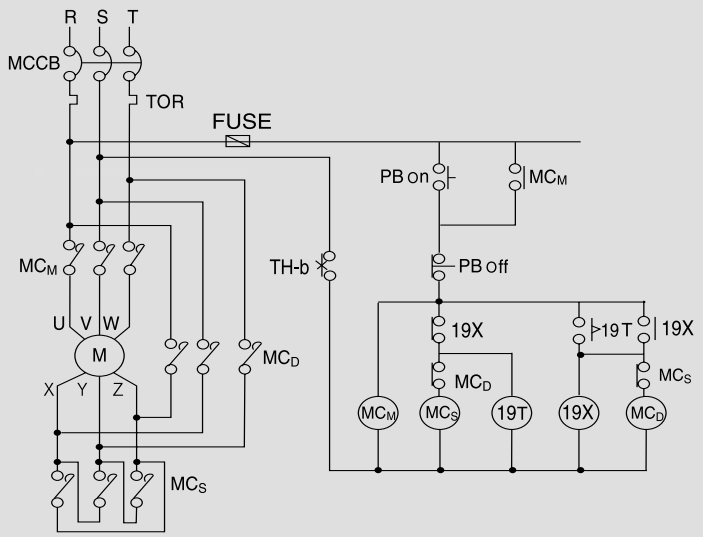

MCM	Contactor for power use
MCD	Contactor for operate use
MCS	Contactor for start use
19T	Timer
19X	Contactor relay
TOR	Thermal overload relay

(Pig 1) Example of a wiring diagram for star-delta combination

Electrical endurance (GMC-9~85)

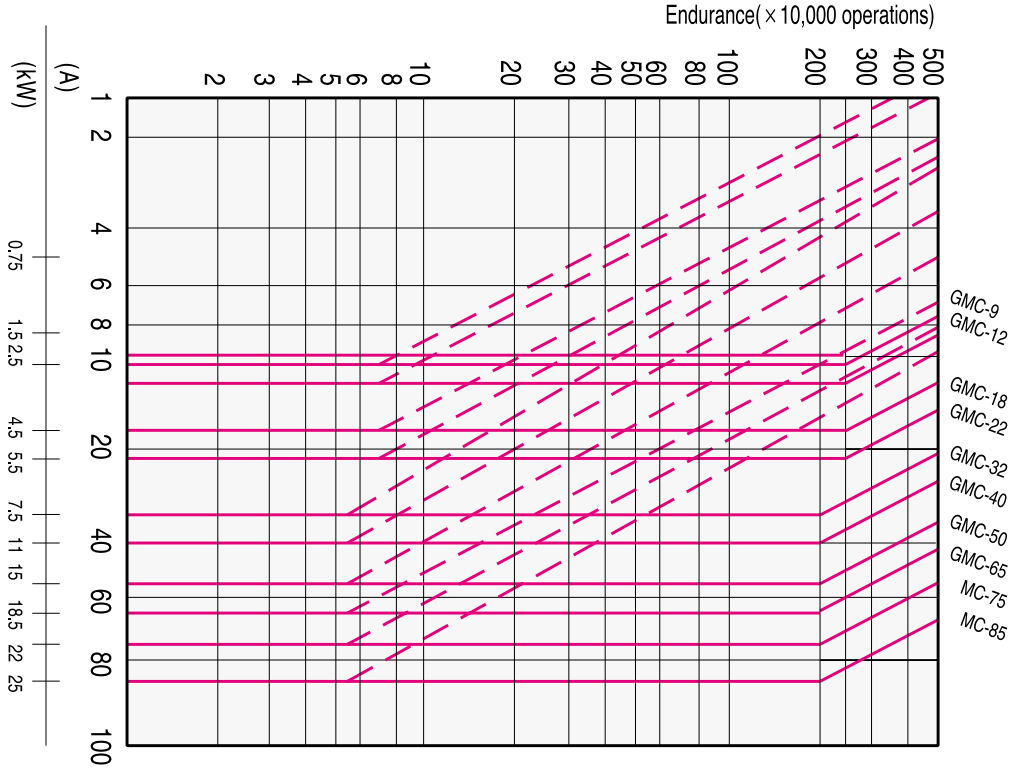

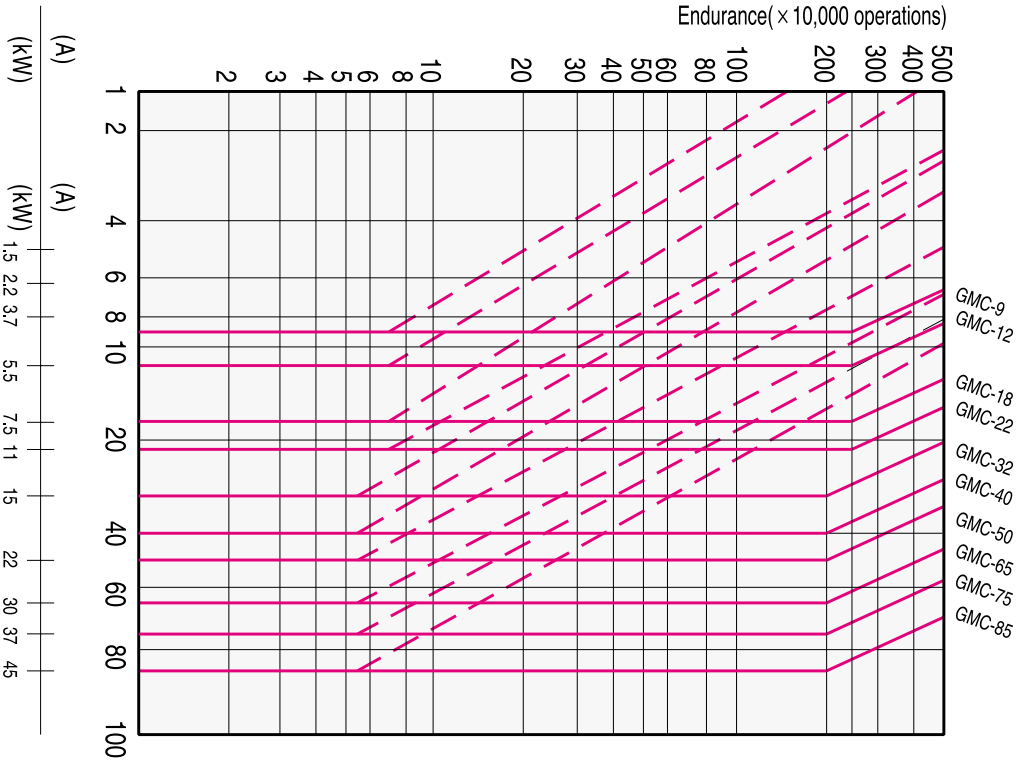

—— AC3(standard)

- - - - - AC 4(Inching, reverse phase breaking duty)

Electrical endurance (GMC-100~800)

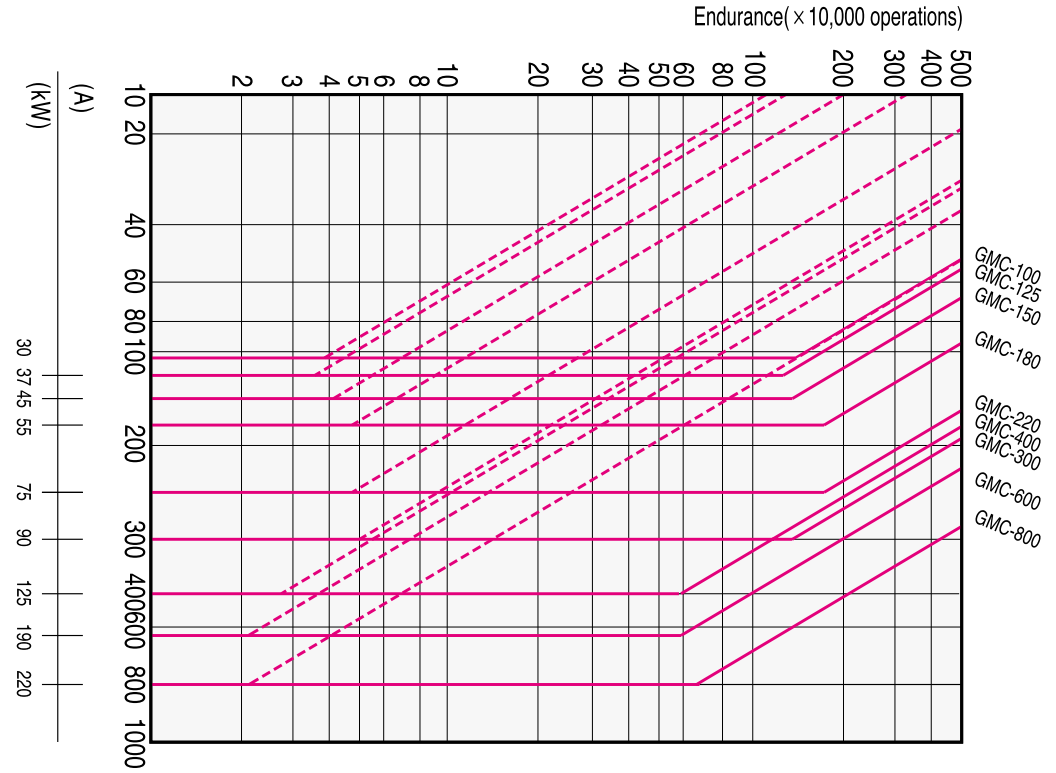

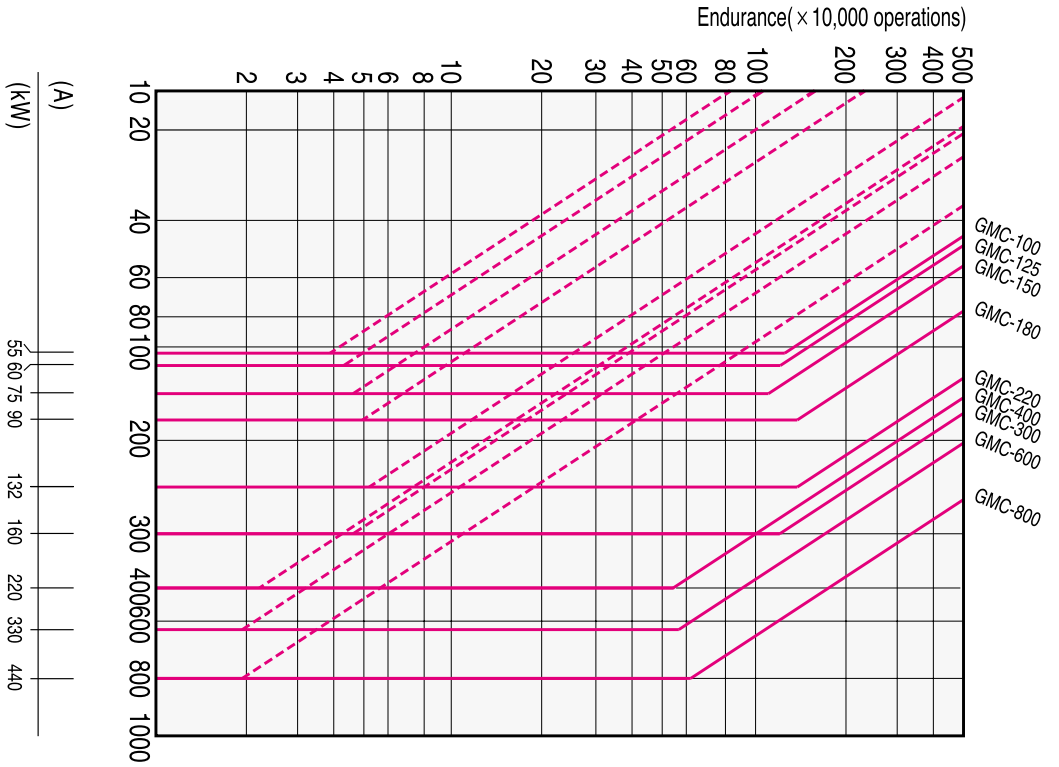

—— AC3(standard)

- - - - AC 4(Inching, reverse phase breaking duty)

Cable selection and screw torque

3-pole contactors

Type	Cable section			Screw size		Torque(Nm)	
	AWG/MCM	ISOmm²		Contactor Terminal	Coil Terminal	Principal Main	Aux.
		MIN	MAX				
GMC-9	10 AWG	1,5	4	M4	M3.5	2,3	2,3
GMC-12	10 AWG	1,5	4	M4	M3.5	2,3	2,3
GMC-18	10 AWG	1,5	6	M4	M3.5	4	2,3
GMC-22	8 AWG	2,5	10	M4	M3.5	4	2,3
GMC-32	6 AWG	4	16	M5	M3.5	4	2,3
GMC-40	6 AWG	4	16	M5	M3.5	4	2,3
GMC-50	4 AWG	6	25	M6	M3.5	5	2,3
GMC-65	2 AWG	10	35	M8	M3.5	5	2,3
GMC-75	2 AWG	10	35	M8	M3.5	5	2,3
GMC-85	0 AWG	10	50	M8	M3.5	5	2,3
GMC-100	00 AWG	25	70	M8	M4	9	2,3
GMC-125	00 AWG	25	70	M8	M4	9	2,3
GMC-150	0000 AWG	35	95	M8	M4	9	2,3
GMC-180	250 MCM	50	120	M10	M4	15	2,3
GMC-220	300 MCM	70	150	M10	M4	15	2,3
GMC-300	500 MCM	95	240	M12	M4	23	2,3
GMC-400	N°2 30×5	150		M12	M4	23	2,3
GMC-600	N°2 50×5	240		M16	M4	57	2,3
GMC-800	N°2 60×5	240		M16	M4	57	2,3

4-pole contactors

Type	Cable section		Screw size		Torque(Nm)	
	AWG/MCM	ISOmm²	Contactor Terminal	Coil Terminal	Principal Main	Aux.
GMC-9/4	10 AWG	4	M3.5	M3.5	2,3	2,3
GMC-12/4	10 AWG	4	M3.5	M3.5	2,3	2,3
GMC-18/4	8 AWG	6	M4	M3.5	4	2,3
GMC-22/4	8 AWG	10	M4	M3.5	4	2,3
GMC-32/4	6 AWG	16	M5	M3.5	4	2,3
GMC-40/4	6 AWG	16	M5	M3.5	4	2,3
GMC-50/4	4 AWG	25	M6	M3.5	5	2,3
GMC-65/4	2 AWG	35	M8	M3.5	5	2,3
GMC-75/4	2 AWG	35	M8	M3.5	5	2,3
GMC-85/4	0 AWG	50	M8	M3.5	5	2,3
GMC-100/4	00 AWG	70	M8	M4	9	2,3
GMC-125/4	00 AWG	70	M8	M4	9	2,3
GMC-150/4	0000 AWG	95	M8	M4	9	2,3
GMC-180/4	250 MCM	120	M10	M4	15	2,3
GMC-220/4	300 MCM	150	M10	M4	15	2,3
GMC-300/4	500 MCM	240	M12	M4	23	2,3
GMC-400/4	N°2 30×5	150	M12	M4	23	2,3
GMC-600/4	N°2 50×5	240	M16	M4	57	2,3
GMC-800/4	N°2 60×5	240	M16	M4	57	2,3

Thermal overload relays

Type	Setting range	Cable selection		Torque (Nm)	Tornillo Screw size
		AWG/MCM	ISOmm²		
GTH(K)-22	0.1~0.16	18AWG	1,5	2,3	M4
	0.16~0.25	18AWG	1,5	2,3	M4
	0.25~0.4	18AWG	1,5	2,3	M4
	0.4~0.63	18AWG	1,5	2,3	M4
	0.63~1	18AWG	1,5	2,3	M4
	1~1.6	18AWG	1,5	2,3	M4
	1.6~2.5	18AWG	1,5	2,3	M4
	2.5~4	18AWG	1,5	2,3	M4
	4~6	18AWG	1,5	2,3	M4
	5~8	16AWG	1,5	2,3	M4
	6~9	16AWG	1,5	2,3	M4
	7~10	16AWG	1,5	2,3	M4
	9~13	14AWG	1,5-2,5	2,3	M4
	12~18	12AWG	2,5	2,3	M4
	16~22	10AWG	2,5-4,0	2,3	M4
GTH(K)-40	4~6	18AWG	1,5	4	M5
	5~8	16AWG	1,5	4	M5
	6~9	16AWG	1,5	4	M5
	7~10	16AWG	1,5	4	M5
	9~13	14AWG	1,5-2,5	4	M5
	12~18	12AWG	2,5	4	M5
	16~22	10AWG	2,5-4,0	4	M5
	18~26	10AWG	2,5-6,0	4	M5
	24~36	10AWG	4,0-10	4	M5
	28~40	10AWG	6,0-10	4	M5
GTH(K)-85	7~10	16AWG	1,5	5,1	M6
	9~13	14AWG	1,5-2,5	5,1	M6
	12~18	12AWG	2,5	5,1	M6
	16~22	10AWG	2,5-4,0	5,1	M6
	18~26	10AWG	2,5-6,6	5,1	M6
	24~36	10AWG	4,0-10	5,1	M6
	28~40	10AWG	6,0-10	5,1	M6
	34~50	6AWG	10-16	5,1	M6
	45~65	4AWG	10-25	5,1	M8
	54~75	4AWG	16-25	5,1	M8
	63~85	3AWG	16-35	5,1	M8
GTH(K)-100	34~50	6AWG	10-16	9	M8
	39~57	6AWG	10-16	9	M8
	43~65	4AWG	10-25	9	M8
	54~80	4AWG	16-25	9	M8
	65~100	2AWG	25-35	9	M8
	85~125	1AWG	35-50	9	M8
GTH(K)-150	34~50	6AWG	10-16	9	M8
	39~57	6AWG	10-16	9	M8
	43~65	4AWG	10-25	9	M8
	54~80	4AWG	16-25	9	M8
	65~100	2AWG	25-35	9	M8
	85~125	1AWG	35-50	9	M8
	100~150	00AWG	35-70	9	M8
GTH(K)-220	65~100	2AWG	25-35	15	M10
	85~125	1AWG	35-50	15	M10
	100~160	00AWG	35-70	15	M10
	120~180	000AWG	50-95	15	M10
	160~240	250AWG	70-120	15	M10
GTH(K)-400	85~125	1AWG	35-50	23	M12
	100~160	00AWG	35-70	23	M12
	120~180	000AWG	50-95	23	M12
	160~240	250AWG	70-120	23	M12
	200~300	400AWG	95-185	23	M12
	260~400	500AWG	150-240	23	M12
GTH(K)-600	200~300	400AWG	95-185	57	M16
	260~400	500AWG	150-240	57	M16
	400~600	N°2 40×5	150-185	57	M16
	520~800	N°2 60×5	185-240	57	M16

Terminal dimensions

Type	Dimensions of terminal				Type	Dimensions of terminal			
	Main circuit		Auxiliary circuit			Main circuit		Auxiliary circuit	
	Tornillo Screw	A×B×C(mm)	Tornillo Screw	A×B×C(mm)		Tornillo Screw	A×B×C(mm)	Tornillo Screw	A×B×C(mm)
GMC-9(/4)	M4	9.5×5×4.9	M3.5	8×5×4.9	GTH(K)-22	M4	10×6.5×5	M3.5	7.8×4.3×7.3
GMC-12(/4)	M4	9.5×5×4.9	M3.5	8×5×4.9					
GMC-18(/4)	M4	9.5×5×4.9	M3.5	8×5×4.9					
GMC-22(/4)	M4	9.5×5×4.9	M3.5	8×5×4.9					
GMC-32(/4)	M5	12.4×6.5×6	M3.5	8×5×4.9	GTH(K)-40	M5	12.4×6.2×6.3	M3.5	7.8×4.3×7.3
GMC-40(/4)	M5	12.4×6.5×6	M3.5	8×5×4.9					
GMC-50(/4)	M6	17.5×7×8.7	M3.5	8×5×4.9	GTH(K)-85	M6	19×8.5×9	M3.5	7.8×4.3×7.3
GMC-65(/4)	M8	17.5×7×8.7	M3.5	8×5×4.9					
GMC-75(/4)	M8	17.5×7×8.7	M3.5	8×5×4.9		M8	19×8.5×9	M3.5	7.8×4.3×7.3
GMC-85(/4)	M8	17.5×7×8.7	M3.5	8×5×4.9					
GMC-100(/4)	M8	15×8.5×9.5	M4	10.8×4.1×4.1	GTH(K)-125	M8	15×9.5×9	M4	8.2×4.1×5.2
GMC-125(/4)	M8	15×8.5×9.5	M4	10.8×4.1×4.1					
GMC-150(/4)	M8	20.5×10×9	M4	10.8×4.1×4.1	GTH(K)-150	M8	20×10×10	M4	8.2×4.1×5.2
GMC-180(/4)	M10	25×12.5×15	M4	10.8×4.1×4.1	GTH(K)-220	M10	25×12.5×13.5	M3.5	7.7×5×4.5
GMC-220(/4)	M10	25×12.5×15	M4	10.8×4.1×4.1					
GMC-300(/4)	M12	30×14.5×20	M4	10.8×4.1×4.1	GTH(K)-400	M12	30×15×11	M3.5	7.7×5×4.5
GMC-400(/4)	M12	30×14.5×20	M4	10.8×4.1×4.1					
GMC-600(/4)	M16	40×20×40.5	M4	10.8×4.1×4.1	GTH(K)-600	M16	30×11.2×23.2	M3.5	7.7×5×4.5
GMC-800(/4)	M16	40×20×40.5	M4	10.8×4.1×4.1					

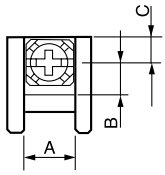

Installation and environment

Installation

1) Operating position

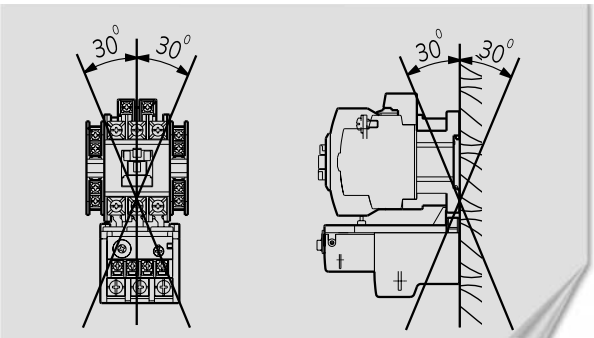

Normal installation

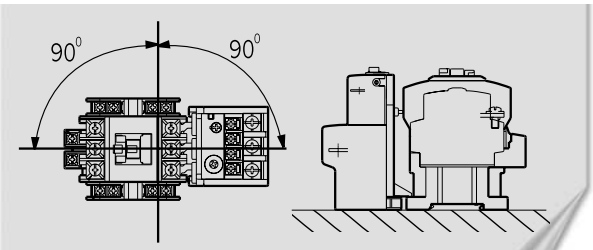

Horizontal or vertical installation

- In special installations, the endurance and other characteristics may be deteriorated.

DIN rail(GMC-9~85)

· 35mm DIN rail

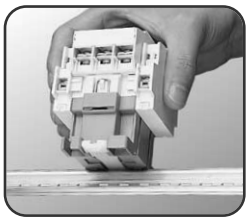

Installation

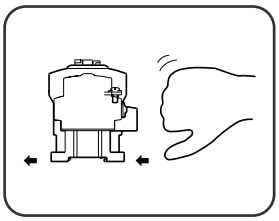

Un-install

Environment

1) Ambient temperature

· -25~40℃

2) Storage temperature

· -30~65℃

3) Altitude : below 2,000m

4) Do not install below freezing point.

D.C. Application

Type	Poles in series	Rated current (DC2, DC4) DC motor load (L/R=15ms)				Rated current (DC1) Resistant load (L/R=1ms)				Rated current (DC1) Coil load (L/R=100ms)			
		24V	48V	110V	220V	24V	48V	110V	220V	24V	48V	110V	220V
GMC(D)-9	2	8	4	2.5	0.8	10	10	6	3	8	4	2	0.3
	3	8	6	4	2	10	10	8	8	8	6	3	0.8
GMC(D)-12	2	12	6	4	1.2	12	12	10	7	12	6	3	0.5
	3	12	10	8	4	12	12	12	12	12	10	5	2
GMC(D)-18	2	12	6	4	1.2	18	18	13	8	12	6	3	0.5
	3	12	10	8	4	18	18	18	18	12	10	5	2
GMC(D)-22	2	20	15	8	2	20	20	15	10	20	12	3	1.2
	3	20	20	15	8	20	20	20	20	20	15	10	4
GMC(D)-32	2	25	20	10	3	25	25	25	12	25	15	4	1.2
	3	25	25	20	10	25	25	25	22	25	25	12	4
GMC(D)-40	2	35	20	10	3	35	35	25	12	35	15	4	1.2
	3	35	30	20	10	35	35	35	30	35	25	12	4
GMC(D)-50	2	45	25	15	3.5	50	40	35	15				
	3	50	35	30	12	50	50	50	40				
GMC(D)-65	2	45	25	15	3.5	50	40	35	15				
	3	50	35	30	12	65	65	65	50				
GMC(D)-75	2	65	40	20	5	75	65	50	20				
	3	80	60	50	20	75	75	75	55				
GMC(D)-85	2	65	40	20	5	80	65	50	20				
	3	80	60	50	20	80	80	80	60				
GMC-100	2	100	60	40	30	100	100	80	50				
	3	100	90	80	50	100	100	100	80				
GMC-125	2	120	60	40	30	120	100	80	50				
	3	120	90	80	50	120	120	100	80				
GMC-150	2	150	100	80	60	150	120	100	100				
	3	150	130	120	80	150	150	150	150				
GMC-180	2	180	150	120	80	180	180	150	150				
	3	180	180	150	100	180	180	180	180				
GMC-220	2	220	150	120	80	220	180	150	150				
	3	220	220	150	100	220	220	220	220				
GMC-300	2	300	200	150	90	300	240	200	200				
	3	300	280	200	150	300	300	300	300				
GMC-400	2	400	200	150	90	400	240	200	200				
	3	400	280	200	150	400	400	400	300				
GMC-600	2	630	630	630	630	630	630	630	630				
	3	630	630	630	630	630	630	630	630				
GMC-800	2	800	630	630	630	800	800	630	630				
	3	800	630	630	630	800	800	800	800				

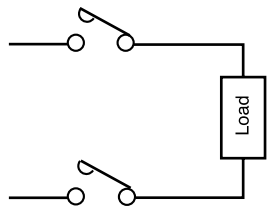

● 2 poles in series

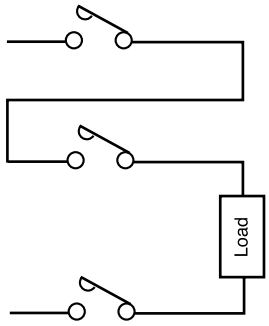

● 3 poles in series

Selection guide for lighting circuit switching

Incandescent

Maximum quantity of lamps per contactor

Type / Consumption	100V								200V							
	100W	150W	200W	250W	300W	500W	1000W	1500W	100W	150W	200W	250W	300W	500W	1000W	1500W
GMC(D)-9	11	7	5	4	3	2	1	-	22	14	11	8	7	4	2	1
GMC(D)-12	13	8	6	5	4	2	1	-	26	17	13	10	8	5	2	1
GMC(D)-18	18	12	9	7	6	3	1	1	36	24	18	14	12	7	3	2
GMC(D)-22	19	12	9	7	6	3	1	1	38	25	19	15	12	7	3	2
GMC(D)-32	26	17	13	10	8	5	2	1	52	34	26	20	17	10	5	3
GMC(D)-40	35	23	17	14	11	7	3	2	70	46	35	28	23	14	7	4
GMC(D)-50	50	33	25	20	15	10	5	3	100	66	50	40	33	20	10	6
GMC(D)-65	65	42	32	26	19	13	6	4	130	85	65	52	42	26	13	8

Fluorescent

Maximum quantity of rapid-start fluorescents per contactor

Type / Consumption	100V							200V							
	40W		60W	80W	110W		220W	40W		60W	80W	110W		220W	
N° Fluorescent.	1	2	1	1	1	2	1	1	2	1	1	1	2	1	1
(A)	0.95 (1.2)	0.96 (1.1)	0.92	1.17	1.55	2.5	2.7	0.29 (0.6)	0.48 (0.55)	0.46	0.58	0.78	1.3	1.36	2.5
GMC(D)-9	18 (9)	11 (10)	12	9	7	4	4	37 (18)	22 (20)	23	19	14	8	8	4
GMC(D)-12	22 (10)	13 (11)	14	11	8	5	4	44 (21)	27 (23)	28	22	16	10	9	5
GMC(D)-18	30 (15)	18 (16)	19	15	11	7	6	62 (30)	37 (32)	39	31	23	13	13	7
GMC(D)-22	32 (15)	19 (17)	20	16	12	7	7	65 (31)	39 (34)	41	32	24	14	14	7
GMC(D)-32	44 (21)	27 (23)	28	22	16	10	9	89 (43)	54 (47)	56	44	33	20	19	10
GMC(D)-40	59 (29)	36 (31)	38	29	22	14	13	120 (58)	72 (63)	76	60	44	26	25	14
GMC(D)-50	84 (41)	52 (45)	54	42	32	20	18	172 (83)	104 (90)	108	86	64	38	37	20
GMC(D)-65	110 (54)	67 (59)	70	55	41	26	24	224 (108)	135 (118)	141	112	83	50	48	26

Note) 1. In 1 lamps, ( ) is the number of the lamps with low power factor.
2. In 2 lamps, ( ) is the number of the flickemess type lamps.

Mercury lamp

Maximum quantity of mercury lamps per contactor

Type / Consumption	Low power factor type-High power factor type															
	40W	100W	200W	250W	300W	400W	700W	1000W	40W	100W	200W	250W	300W	400W	700W	1000W
(A)	1.25 0.55	2.6 1.4	4.6 2.6	5.1 3.0	6.0 3.7	8.0 4.9	14.5 8.5	21 12	0.53 -	1.0 0.65	1.9 1.2	2.1 1.5	2.5 1.8	3.3 2.3	5.9 4.1	8.5 5.8
GMC(D)-9	8/20	4/7	2/4	2/3	1/2	1/1	-/-	-/-	20/-	11/16	5/9	5/7	4/6	3/4	1/2	1/1
GMC(D)-12	10/23	5/9	2/5	2/4	2/3	1/1	-/1	-/1	24/-	13/20	6/10	6/8	5/7	3/5	2/3	1/2
GMC(D)-18	14/32	6/12	3/6	3/6	3/4	2/3	1/2	-/1	33/-	18/27	9/15	8/12	7/10	5/7	3/3	2/3
GMC(D)-22	15/34	7/13	4/7	3/6	3/5	2/3	1/2	-/1	35/-	19/29	10/15	9/12	7/10	5/8	3/4	2/3
GMC(D)-32	20/47	10/18	5/10	5/8	4/7	3/5	1/3	1/2	49/-	26/40	13/21	12/17	10/14	7/11	4/6	3/4
GMC(D)-40	28/63	13/25	7/13	6/11	5/9	4/7	2/4	1/2	66/-	35/53	18/29	16/23	14/19	10/15	5/8	4/6
GMC(D)-50	40/90	19/35	10/19	9/16	8/13	6/10	3/5	2/4	94/-	50/76	26/41	23/33	20/27	15/21	8/12	6/8
GMC(D)-65	52/118	25/46	14/25	12/21	10/17	8/13	4/7	3/5	122/-	65/100	34/54	30/43	26/36	19/28	11/15	7/11

Short-circuit co-ordination

Direct starters with molded case circuit breakers (50kA-415V · IEC60947)

Motor		MCCB		Contactor	Thermal overload relay	
(kW)	440V(A)	Type	Rating Ir(A)	Type	Type	Settings range (A)
5.5	11	GBH(L)53	16	GMC-32	**GTH(K)-40**	9~13
7.5	15	GBH(L)53	16	GMC-32	**GTH(K)-40**	12~18
10	19	GBH(L)53	25	GMC-32	**GTH(K)-40**	18~26
11	21	GBH(L)53	25	GMC-32	**GTH(K)-40**	18~26
15	28	GBH(L)53	32	GMC-32	**GTH(K)-40**	24~36
18.5	34	GBH(L)53	40	GMC-75	**GTH(K)-85**	28~40
22	39	GBH(L)53	50	GMC-75	**GTH(K)-85**	34~50
30	54	GBH(L)103	63	GMC-75	**GTH(K)-85**	45~65
37	66	GBH(L)103	80	GMC-75	**GTH(K)-85**	54~75
45	80	GBH(L)103	100	GMC-100	**GTH(K)-100**	65~100
55	99	GBH(L)103	100	GMC-100	**GTH(K)-100**	85~125
75	135	GBH(L)203	160	GMC-150	**GTH(K)-150**	100~150
90	160	GBH(L)203	200	GMC-180	**GTH(K)-220**	120~180
110	192	GBH(L)203	200	GMC-180	**GTH(K)-220**	160~240
132	226	GBH(L)203	250	GMC-220	**GTH(K)-220**	160~240
160	265	ABH(L)403b	300	GMC-400	**GTH(K)-400**	200~300
200	330	ABH(L)403b	350	GMC-400	**GTH(K)-400**	260~400
220	353	ABH(L)403b	400	GMC-400	**GTH(K)-400**	260~400
250	400	ABS(L)603b	500	GMC-600	**GTH(K)-600**	260~400
300	480	ABS(L)603b	500	GMC-600	**GTH(K)-600**	400~600

Note) * Magnetic only

Direct starters with molded case circuit breakers (85kA-415V · IEC60947)

Motor		MCCB		Contactor	Thermal overload relay	
(kW)	440V(A)	Type	Rating Ir(A)	Type	Type	Settings range (A)
5.5	11	GBL53	16	GMC-32	**GTH(K)-40**	9~13
7.5	15	GBL53	16	GMC-32	**GTH(K)-40**	12~18
10	19	GBL53	25	GMC-32	**GTH(K)-40**	18~26
11	21	GBL53	25	GMC-32	**GTH(K)-40**	18~26
15	28	GBL53	32	GMC-32	**GTH(K)-40**	24~36
18.5	34	GBL53	40	GMC-75	**GTH(K)-85**	28~40
22	39	GBL53	50	GMC-75	**GTH(K)-85**	34~50
30	54	GBL103	63	GMC-75	**GTH(K)-85**	45~65
37	66	GBL103	80	GMC-75	**GTH(K)-85**	54~75
45	80	GBL103	100	GMC-100	**GTH(K)-100**	65~100
55	99	GBL103	100	GMC-100	**GTH(K)-100**	85~125
75	135	GBL203	160	GMC-150	**GTH(K)-150**	100~150
90	160	GBL203	200	GMC-180	**GTH(K)-220**	120~180
110	192	GBL203	200	GMC-180	**GTH(K)-220**	160~240
132	226	GBL203	250	GMC-220	**GTH(K)-220**	160~240
160	265	ABL403b	300	GMC-400	**GTH(K)-400**	200~300
200	330	ABL403b	350	GMC-400	**GTH(K)-400**	260~400
220	353	ABL403b	400	GMC-400	**GTH(K)-400**	260~400
250	400	ABL603b	500	GMC-600	**GTH(K)-600**	260~400
300	480	ABL603b	500	GMC-600	**GTH(K)-600**	400~600

Note) Tables are based on a combination of tests on a previous range and technical comparison.

Contactors with protection fuses

Type	AC1 (A)	690V AC3 Ie(A)	Short-circuit test	
			Fuse available fault current 100,000A	Ue / "r"
GMC-9	20	5	gL/gG 25A	690V/1kA
GMC-12	20	9	gL/gG 32A	690V/1kA
GMC-18	25	9	gL/gG 35A	690V/3kA
GMC-22	32	18	gL/gG 50A	690V/3kA
GMC-32	50	20	gL/gG 63A	690V/3kA
GMC-40	60	23	gL/gG 80A	690V/3kA
GMC-50	80	28	gL/gG 100A	690V/3kA
GMC-65	100	35	gL/gG 100A	690V/3kA
GMC-75	110	42	gL/gG 100A	690V/3kA
GMC-85	135	45	gL/gG 200A	690V/3kA
GMC-100	150	65	gL/gG 150A	690V/5kA
GMC-125	150	70	gL/gG 160A	690V/5kA
GMC-150	200	100	gL/gG 200A	690V/5kA
GMC-180	230	120	gL/gG 225A	690V/5kA
GMC-220	260	150	gL/gG 250A	690V/10kA
GMC-300	350	220	gL/gG 355A	690V/10kA
GMC-400	420	300	gL/gG 400A	690V/10kA
GMC-600	660	420	gL/gG 630A	690V/18kA
GMC-800	800	630	gL/gG 800A	690V/18kA

Thermal overload relays with protection fuses

Type	AC1 (A)	690V AC3 Ie(A)	Short-circuit test	
			Fuse available fault current 100,000A	Ue / "r"
GTH(K)-22	32	1.6	gL/gG 4A	690V/1kA
GTH(K)-22		2.5	gL/gG 6A	690V/1kA
GTH(K)-22		4	gL/gG 10A	690V/1kA
GTH(K)-22		22	gL/gG 50A	690V/3kA
GTH(K)-40	60	6	gL/gG 16A	690V/1kA
GTH(K)-40		8	gL/gG 20A	690V/1kA
GTH(K)-40		9	gL/gG 20A	690V/1kA
GTH(K)-40		40	gL/gG 80A	690V/3kA
GTH(K)-85	135	18	gL/gG 35A	690V/3kA
GTH(K)-85		22	gL/gG 50A	690V/3kA
GTH(K)-85		26	gL/gG 63A	690V/3kA
GTH(K)-85		36	gL/gG 80A	690V/3kA
GTH(K)-85		40	gL/gG 80A	690V/3kA
GTH(K)-85		50	gL/gG 100A	690V/3kA
GTH(K)-85		65	gL/gG 160A	690V/5kA
GTH(K)-85		75	gL/gG 160A	690V/5kA
GTH(K)-85		85	gL/gG 200A	690V/5kA
GTH(K)-100	150	65	gL/gG 150A	690V/5kA
GTH(K)-100		125	gL/gG 225A	690V/5kA
GTH(K)-150	200	100	gL/gG 200A	690V/5kA
GTH(K)-150		150	gL/gG 250A	690V/10kA
GTH(K)-220	260	150	gL/gG 250A	690V/10kA
GTH(K)-220		240	gL/gG 355A	690V/10kA
GTH(K)-400	420	300	gL/gG 400A	690V/10kA
GTH(K)-400		400	gL/gG 630A	690V/18kA
GTH(K)-600	800	400	gL/gG 630A	690V/18kA
GTH(K)-600		630	gL/gG 800A	690V/18kA
GTH(K)-600		800	gL/gG 1400A	690V/30kA

Contactor relays

Characteristics

- **High reliability**
  Increase the reliability by use of the pure silver contacts.
- **Long life**
  10Million mechanical cycles and 0.5~1Million electrical cycles according to the rated current.
- **Din-rail mounting(35m)**
- **Finger proof (Standard)**

Ratings

Type			GMR - 4(D)	GMR - 6(D)	GMR - 8(D)
Contacts available			4NO, 3NO1NC, 2NO2NC, 1NO3NC,4NC	6NO, 5NO1b, 4NO2NC, 3NO3NC, 2NO4NC	8NO, 7NO1NC, 6NO2NC, 5NO3NC, 4NO4NC
Rated insulation voltage(Ui)			690V		
Thermal current (Ith)			16A		
AC ratings	Duties		AC15(Inductive load)		AC12(Resistive load)
	Rated current (A)	AC110V	6		10
		AC220V	3		8
		AC440V	1.5		5
		AC550V	1.2		5
	Short circuit max. Permissible current (A)	AC110V	66		66
		AC220V	33		33
		AC440V	16.5		16.5
		AC550V	13.2		13.2
DC ratings	AC220V		DC13(Inductive load)		AC12(Resistive load)
	Rated current (A)	DC24V	3		5
		DC48V	1.5		3
		DC110V	1.1		2.5
		DC220V	0.55		1
	Short circuit max. Permissible current (A)	DC24V	3.7		-
		DC48V	1.8		-
		DC110V	1.4		-
		DC220V	0.7		-
Endurance (×10,000 operations)	Electrical		50		25
	Mechanical		2,000		
Frequency	Operations / hour		1,800		

Performance

Type	Pole	Frequency (Operations /hour)	Mechanical endurance (×10,000 operations)	Electrical endurance (×10,000 operations)				
				AC 15		AC 12		DC 13,12
				220V	440V	220V	440V	24~220V
GMR - 4, 4D	4	1,800	2,000	50	50	25	25	50
GMR - 6, 6D	6	1,800	2,000	50	50	25	25	50
GMR - 8, 8D	8	1,800	2,000	50	50	25	25	50

Operating coil ratings

1) Ratings of the AC coil

Type	Rated voltage	
	50Hz	60Hz
GMR - 4 GMR - 6 GMR - 8	24V, 42V, 48V, 100V, 110V, 220V, 240V, 380V, 400V, 440V, 500V, 550V	24V, 48V, 100V, 120V, 208V, 220V, 240V, 277V, 380V, 440V, 480V, 600V,

Note) 1. In GMC-9~85 contactors, 50Hz and 60Hz coils are separated.
2. The operation voltage ranges 0.85~1.1 times of the rated voltage

2) Ratings of the DC coil

Type	Rated voltage
GMR - 4D GMR - 6D GMR - 8D	12V, 20V, 24V, 48V, 60V, 80V 100V ,110V, 125V, 200V, 220V, 250V

Coil characteristics

1) AC coil(AC 220V, 60Hz)

Type		Coil consumption (VA)		Thermal dissipation (W)	Operation voltage (V)		Operation time (ms)			
		Inrush	Holding		Pick-up	Drop-out	Coil ON ➡ NO contact ON	Coil ON ➡ NC contact OFF	Coil OFF ➡ NO contact OFF	Coil OFF ➡ NC contact ON
GMR - 4	4NO	95	9	2	141~156	105~125	10~17	-	7~13	-
	2NO2NC				138~148	110~130	8~15	6~15	7~13	8~15
GMR - 6	6NO				145~160	100~120	10~17	-	7~13	-
	3NO3NC				140~155	105~125	10~16	5~13	7~13	8~15
GMR - 6	8NO				150~160	90~110	10~18	-	7~13	-
	4NO4NC				148~158	95~115	10~16	5~13	7~13	8~15

2) DC coil (DC110V)

Type		Coil consumption(VA)		Thermal dissipation (W)	Operation voltage (V)		Operation time (ms)			
		Inrush	Holding		Pick-up	Drop-out	Coil ON ➡ NO contact ON	Coil ON ➡ NC contact OFF	Coil OFF ➡ NO contact OFF	Coil OFF ➡ NC contact ON
GMR - 4D	4NO	9	9	50	65~75	15~35	45~55	-	7~13	-
	2NO2NC				63~73	18~38	40~50	20~30	7~13	13~19
GMR - 6D	6NO				68~78	15~35	45~55	-	7~13	-
	3NO3NC				63~73	18~38	40~50	20~30	7~13	8~15
GMR - 6D	8NO				70~80	15~35	45~55	-	7~13	-
	4NO4NC				63~73	18~38	40~50	20~30	7~3	13~19

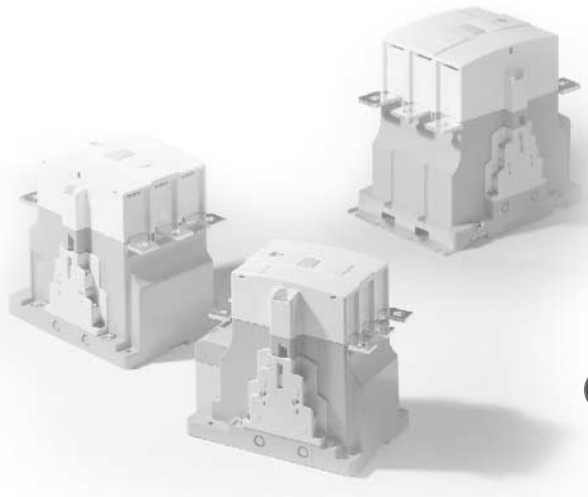

Accessories

Auxiliary contacts blocks

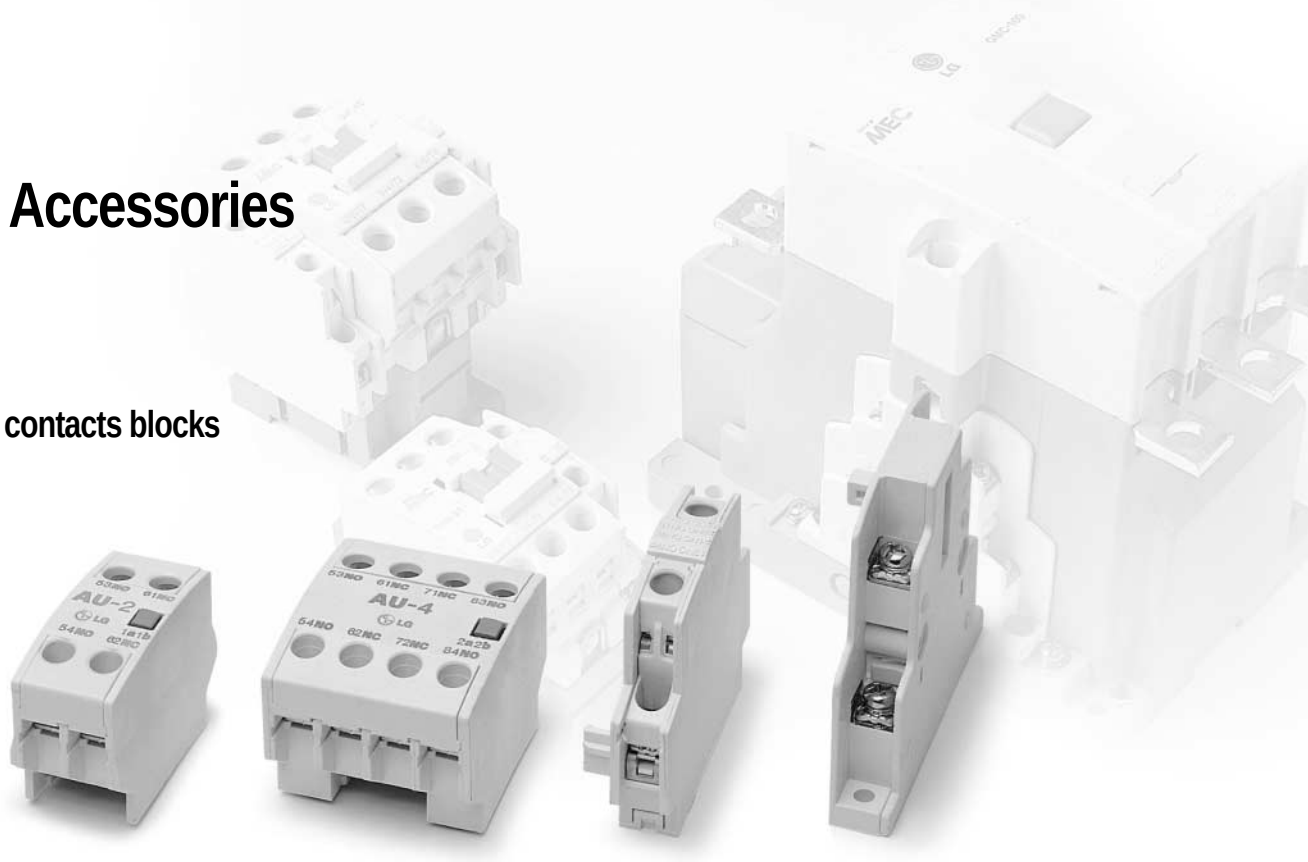

Head on

Type	Pole	Contact configuration	Combined contactors
AU - 2	2	2NO, 1NO1NC, 2NC	GMC(D)-9~GMC(D)-85
AU - 4	4	4NO, 3NO1NC, 2NO2NC,1NO3NC, 4NC	

Side on

Type	Pole	Contact configuration	Combined contactors
AU - 1	2	1NO - 1NC	GMC(D)-9~GMC(D)-85
AU - 100	2	1NO - 1NC	GMC-100~GMC-800

Ratings

Type		Rated current (A)																Thermal current (Ith)
		AC 15				DC 13				AC 12				DC 13				
		110V	120V	440V	550V	24V	48V	110V	220V	110V	120V	440V	550V	24V	48V	110V	220V	
Top type	AU - 2	6	3	1.5	1.2	3	1.5	0.55	0.27	10	8	5	5	5	3	2.5	1	16
	AU -4	6	3	1.5	1.2	3	1.5	0.55	0.27	10	8	5	5	5	3	2.5	1	16
Side type	AU - 1	6	3	1.5	1.2	3	1.5	0.55	0.27	10	8	5	5	5	3	2.5	1	16
	AU - 100	6	5	3	3	6	3	1.2	0.2	10	10	5	5	5	3	1.5	0.25	16

Performance

Type	Operating cycles (Times / hour)	Mechanical endurance (×10,000 operations)	Electrical endurance (×10,000 operations)				
			AC15		AC12		DC12
			220V	440V	220V	440V	24~220V
AU-2	1800	2000	50	50	25	25	50
AU-4	1800	2000	50	50	25	25	50
AU-1	1800	2500	50	50	25	25	50
AU-100	1800	1000	50	50	25	25	50

Mechanical Interlock unit

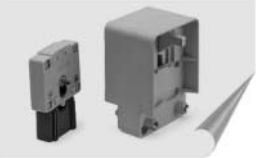

Type	Applied contactors	
AR-9(horizontal)	GMC(D)-9~85	GMC(D)-9/4~85/4
AR-100(horizontal), AR-100V(vertical)	GMC-100~150	-
AR-180(horizontal), AR-180V(vertical)	GMC-180~400	GMC-100/4~400/4
AR-600(horizontal), AR-600V(vertical)	GMC-600~800	GMC-600/4~800/4

Mechanical latch

Type	Applied contactors	
AL-9	GMC-9~40	GMC-9/4~40/4
AL-50	GMC-50~85	GMC-50/4~85/4
AL-100	GMC-100, 125	-
AL-150	GMC-150	-
AL-220	GMC-180, 220	-
AL-400	GMC-300, 400	-

Delay open device

Type	Applied contactors
AD-9	GMD-9(/4)~40(/4)
AD-50	GMD-50(/4)~85(/4)
AD-100	GMC-100(/4)~220(/4)
AD-300	GMC-300(/4)~400(/4)
AD-600	GMC-600(/4)~800(/4)

Insulation barrier

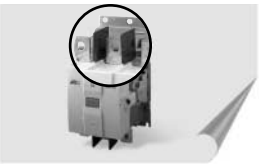

Type	Applied contactors	Pack of units
AI-100	GMC-100(/4)~150(/4)	4pcs
AI-180	GMC-180(/4)~400(/4)	
AI-600	GMC-600(/4), 800(/4)	

Pneumatic timer

Type	Delay	Time	Auxiliary	Applied contactors
AT-1N	ON	0.1~30 s	1NO1NC	GMC-9(/4)~85(/4)
AT-2N		10~180 s		
AT-1F	OFF	0.1~30 s		
AT-2F		10~180 s		

Enclosures for direct starters

Type	Applied contactors	Configuration
GMW	GMC-9~22	Without push buttons
GMW-□B	GMC-9~22	With start and stop push buttons

AC Coils

Type	Applied contactors	
ACC940 *	GMC-9~40	GMC-9/4~40/4
ACC5085 *	GMC-50~85	GMC-50/4~85/4
ACC100150 *	GMC-100~150	-
ACC180220 *	GMC-180~220	GMC-100/4~220/4
ACC300400 *	GMC-300~400	GMC-300/4~400/4
ACC600800 *	GMC-600~800	GMC-600/4~800/4

Note) * : Standard voltages : 12-24-48-110-220-240-380-400-415V

DC Coils

Type	Applied contactors	
DCC940 *	GMD-9~40	GMD-9/4~40/4
DCC5085 *	GMD-50~85	GMD-50/4~85/4

Note) * : Standard voltages : 12(TKD9~TKD85)-24 + 48(TKC(D)9~TKC220)-110-220V

Surge suppressor

Type	Internal elements	Operational voltage	Element Specif.	Applied contactors
AS-11	Varistor	AC/DC 24~48V	Varistor 120V	GMC-9(/4)~800(/4)
AS-12		AC/DC 100~125V	Varistor 270V	
AS-13		AC/DC 200~240V	Varistor 470V	
AS-14		AC 380~440V	Varistor 1000V	
AS-1	CR * + Varistor	AC 24~48V	Varistor 120V 0.1μF, 100Ω	GMC-9(/4)~85(/4)
AS-2		AC 100~125V	Varistor 270V 0.1μF, 100Ω	
AS-3		AC 200~240V	Varistor 470V 0.1μF, 100Ω	
AS-4		DC 24~48V	Varistor 120V 0.47μF, 100Ω	GMD-9(/4)~85(/4)
AS-5		DC 100~125V	Varistor 270V 0.47μF, 100Ω	
AS-6		DC 200~220V	Varistor 470V 0.47μF, 100Ω	

Note) * CR = Condenser + Resistor

Supperssor	Performance	Surge wave
Without unit	When coil circuits are interrupted, surge voltages can arise, and may provoke misoperation and damages in the circuit.	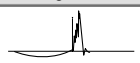
With varistor	A varistor installed in parallel with the coils has an effect to cut down the peak voltage.	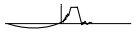
With CR-varistor	This combination has the effect to cut down the peak voltage and high frequency wave.	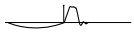

Contactors main terminal protector or terminal cover

Type	Applied contactors 3-pole
AP125	GMC-100~125
AP150	GMC-150
AP220	GMC-180~220
AP400	GMC-300~400
AP600	GMC-600~800

Type	Applied contactors 4-pole
AP220/4	GMC-100~220
AP400/4	GMC-300~400
AP600/4	GMC-600~800

Note) The referrence contains two pieces for top and bottom protection terminals.

Thermal overload relay main terminal protector or terminal cover

Type	Applied thermal overload relay
APT125	GTH(K)-125
APT150	GTH(K)-150
APT220	GTH(K)-220
APT400	GTH(K)-400
APT600	GTH(K)-600

AP — T / 4

-	Contator
T	Tor
S	Direct starter

Terminal lug

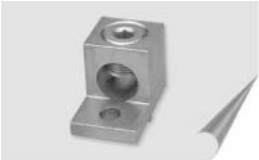

AJ — 100

Type	Applied contactors		
	3P	Type	4P
100	GMC-100, 125	180	GMC-100/4 ~ 220/4
150	GMC-150		
180	GMC-180, 200		
300	GMC-300(/4), 400(/4)		
600	GMC-600(/4), 800(/4)		

Reversing contactors

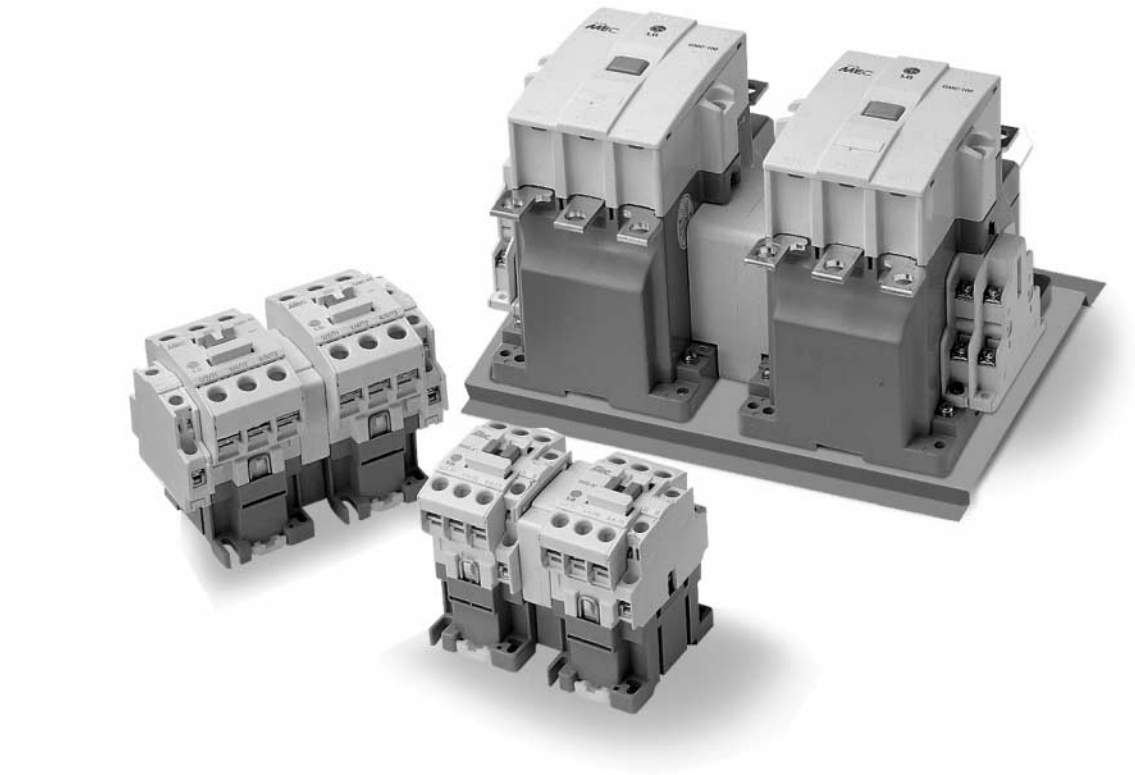

- Reversing magnetic contactor is a combination of two standard magnetic contactors with a mechanical interlock unit.
- Applications are for forwarding, reversing, reverse phase breaking, constant, instant and transfer operation of motor.

Ratings

Contactors	Direct starters	Rated power (kW) (AC3)			Rated current (A) (AC3)			Ith AC1 (A)	Auxiliary contacts		Combined TOR	
		200~220V	380~440V	500~550V	200~220V	380~440V	500~550V		Standard	Option	Type	Range (A)
GMC-9R	GMS-9R	2.5	4	4	11	9	7	20	1NO1NC × 2	AU-2 or AU-4	GTH-22	0.1~22
GMC-12R	GMS-12R	3.5	5.5	7.5	13	12	12	20				
GMC-18R	GMS-18R	4.5	7.5	7.5	18	18	13	25				
GMC-22R	GMS-22R	5.5	11	15	22	22	22	32				
GMC-32R	GMS-32R	7.5	15	18.5	32	32	28	50			GTH-40	4~40
GMC-40R	GMS-40R	11	18.5	22	40	40	32	60				
GMC-50R	GMS-50R	15	22	30	55	50	43	80			GTH-85	7~85
GMC-65R	GMS-65R	18.5	30	37	65	65	60	100				
GMC-75R	GMS-75R	22	37	45	75	75	64	110				
GMC-85R	GMS-85R	25	45	45	85	85	75	135				
GMC-100R	GMS-100R	30	55	55	105	105	85	150	2NO2NC × 2	—	GTH-100	34~125
GMC-125R	GMS-125R	37	60	60	125	120	90	150				
GMC-150R	GMS-150R	45	75	90	150	150	140	200			GTH-150	34~150
GMC-180R	GMS-180R	55	90	110	180	180	180	230			GTH-220	65~240
GMC-220R	GMS-220R	75	132	132	220	220	200	260				
GMC-300R	GMS-300R	90	160	160	300	300	250	350			GTH-400	85~400
GMC-400R	GMS-400R	125	220	225	400	400	350	420				

Structure and operation of the Mechanical interlock

Structure

- GMC(S)-9R~85R are Din-rail mounting type
- The mechanical interlock is common in GMC(S)-9R ~ 85R

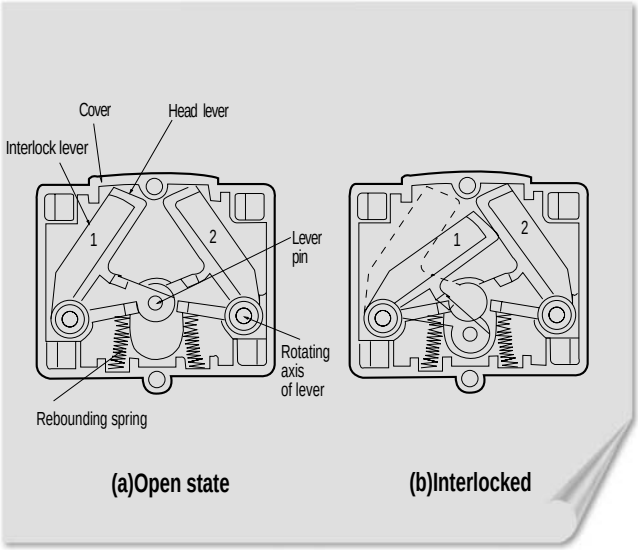

Operation

- **Open state**
  When the two contactors are in the “OFF” position, the lever maintains it’s “OPEN” state by rebounding springs.
- **Interlocking**
  When a any one of the contactors are energised, as the lever pincomes down by the crossbar, the interlock lever revolves around it’s axis of rotation and the heads of levers 1 and 2 are interlocked.
- **Releasing**
  If one of the two contactors is de-energised, crossbar comes up by the power of kick out spring, and then interlock lever goes up by the cross bar, and added with the power of rebounding springs, the interlock lever gets pushed up to the open position.

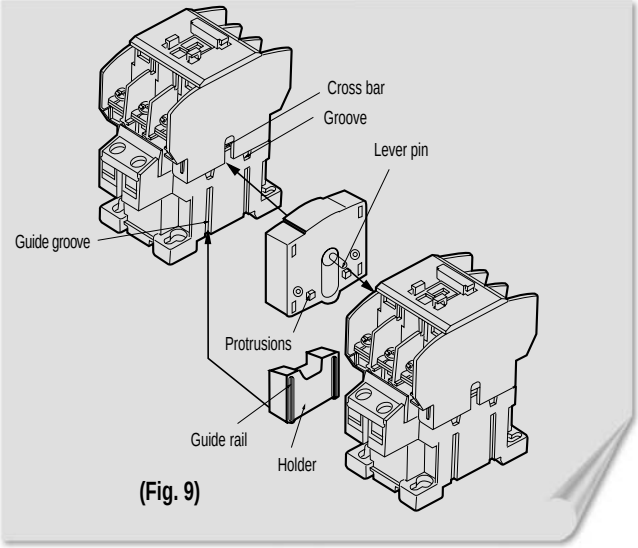

(Fig. 9)

Handling

- The electrical interlock should be commonly connected to the “NC”contacts of the two contactors.
- Do not install horizontally

Latching contactors

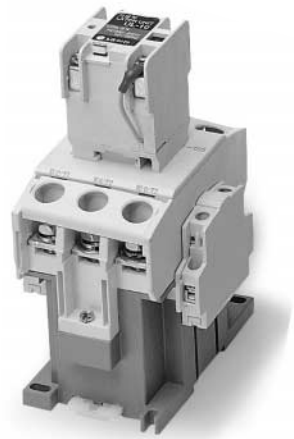

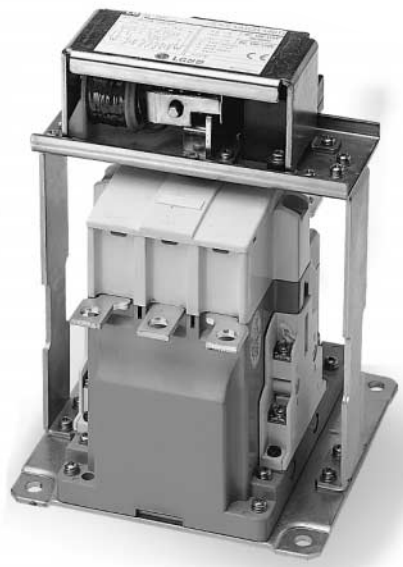

Characteristics

The mechanical latch unit maintains the main contacts in the closed condition after the coil power has been removed. Main contacts are opened via the rebound coil.

Power saving and safe closing

After it is mechanically latched by the closing coil, the NC contact turned off. (Instantaneously magnetized)

Ratings

Type	Aux. contact	Close and Open		Endurance(×10,000 operations)	
		Breaking current	Frequency	Electrical	Mechanical
GMC - 9L,12L,18L,22L	1NO1NC	10 times of AC3 ratings	1200 Operations /hour	50	50
GMC - 32L,40L	2NO2NC			25	25
GMC - 50L,65L,75L,85L	1NO2NC				
GMC - 100L,125L	1NO2NC	10 times of AC3 ratings		25	25
GMC - 150L					
GMC - 180L,220L					
GMC - 300L,400L				20	20

Ratings of rebound coil

Type	Rated voltage	Voltage ranges
GMC- 9L ~ 85L	AC100	100~127V 50/60Hz
	AC200	200~240V 50/60Hz
	AC300	260~350V 50/60Hz
	AC400	380~440V 50/60Hz
	AC500	460~550V 50/60Hz
	DC12V	DC12V
	DC24V	DC24V
	DC48V	DC48V
	DC100V	DC100~110V
	DC125V	DC120~125V
	DC200V	DC200~220V
GMC- 100L ~ 400L	AC100V	100~127V 50/60Hz
	AC200V	200~240V 50/60Hz

Operational characteristics

Type	Consumption (VA)		Operational voltage (V)		Operational time (ms)		Transformer consumption (VA)
	Close	Open	Close	Open	Close	Open	
GMC - 9L,12L,18L,22L	100	90	160	45	15	11	40~60
GMC - 32L,40L	100	90	160	45	15	11	40~60
GMC - 50L,65L,75L,85L	120	100	160	45	30	15	40~60
GMC - 100L,125L	298	500	80	150	30~34	10~25	500
GMC - 150L	298	500	80	150	37~41	10~25	500
GMC - 180L,220L	380	500	80	150	45	10~25	500
GMC - 300L,400L	571	500	80	150	45~50	10~25	500

Note) 1. AC220V, 60Hz The operational times are the average values after coil is energized

2-pole AC magnetic contactor

SMC-20P2 is designed for conditioning motors such as air conditioning, heating, drying or refrigeration equipment or turning on and off lighting equipment.

Compact, small size, low weight

Space saving dimensions allow easy installing and wiring so that the size of panels get smaller.

Two normally open main contacts

- 2-pole, Single phase
- No auxiliary contacts

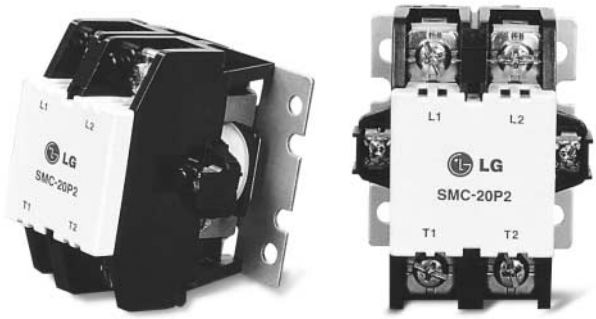

Type designation

SMC — 20P / 2 / TS BQ 110V

Magnetic contactors	Ampere frame		Pole		Terminal connection		Coil connection		Operational voltage	
	20P	20	1	1Pole	TS	Screw	BS	Screw	24V	24V
	25P	25	2	2Pole	TQ	Quick connect	BQ	Quick connect	48V	48~50V
	30P	30							110V	100~120V
									220V	208~240V

Rating

Type	Standard (AC3)				Inching (AC4)				Thermal current (AC1)	Endurance (×10,000 operations)			Closing & opening ampere	
										Electrical		Mechanical		
	100~110V	200~220V	380~440V	500~550V	100~110V	200~220V	380~440V	500~550V		AC3	AC4	1200operations/h	Close	Open
SMC-20P2	20A	20A	17A	14A	18A	18A	13A	10A	30A	20	1.5	200	120	20
SMC-25P2	25A	25A	21A	17A	20A	20A	14A	12A	35A	20	1.5	200	150	25
SMC-30P2	30A	30A	23A	21A	22A	22A	20A	14A	40A	20	1.5	200	180	30

Coil characteristics (AC 220V, 60Hz)

Type	Voltage(AC)	Average consumption (VA)		Thermal dissipation	Operational voltage(V)		Operating time		Coil current (mA)	Coil resistance (Ω)
		Inrush	sealed		Pick-up	Drop-out	Closing	Opening		
AC 24V	**AC 24V 50/60Hz**	31	7	2.7	19.2~	~7.2	30~45	8~15	330	10.28
AC 48V	**AC 48~50V 50/60Hz**	31	7	2.7	38.4~	~14.4	30~45	8~15	156	50.68
AC 110V	**AC 100~120V 50/60Hz**	31	7	2.7	80~	~30	30~45	8~15	85.8	264
AC 220V	**AC 208~240V 50/60Hz**	31	7	2.7	176~	~66	30~45	8~15	~39	975.0

Cable selection and screw torque

Type	Main terminal				Coil terminal			
	Contactor Terminal	Cable selection (㎟)	Ring terminal (㎟)	Screw torque (kgf · ㎝)	Contactor Terminal	Cable selection (㎟)	Ring terminal (㎟)	Screw torque (kgf · ㎝)
SMC-20P2	M5 ×12	3.5~5.5	3.5-5~5.5-5	15(+30%, -20%)	M3.5	1.25~2	1.25-3.5~2-3.5	12(+30%, -20%)
SMC-25P2	M5 ×12	5.5~8	5.5-5~8-5	26(+30%, -20%)	M3.5	1.25~2	1.25-3.5~2-3.5	12(+30%, -20%)
SMC-30P2	M5 ×12	5.5~8	5.5-5~8-5	26(+30%, -20%)	M3.5	1.25~2	1.25-3.5~2-3.5	12(+30%, -20%)

External and mounting dimensions

Type	External and mounting dimensions	
SMC-20P2 SMC-25P2 SMC-30P2 (TSBS TYPE)	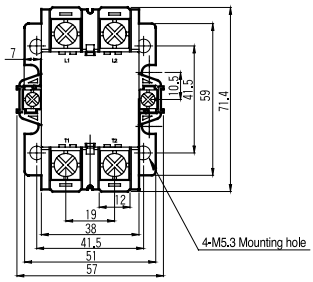	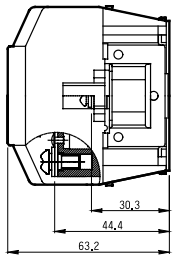 0.25kg
SMC-20P2 SMC-25P2 (TQBS TYPE)	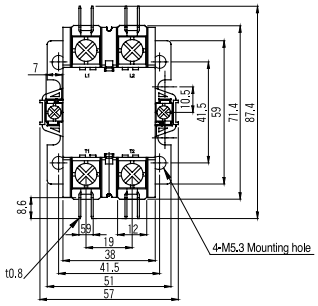	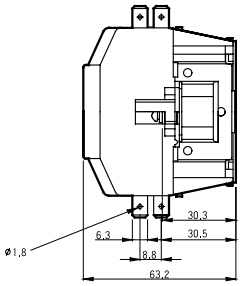 0.26kg
SMC-20P2 SMC-25P2 SMC-30P2 (TSBQ TYPE)	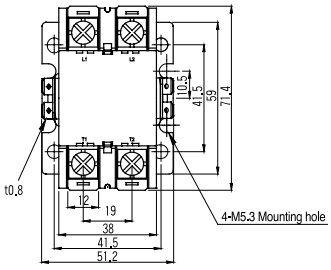	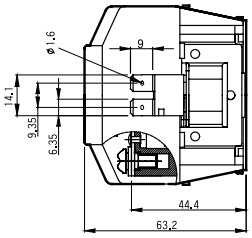 0.25kg
SMC-20P2 SMC-25P2 (TQBQ TYPE)	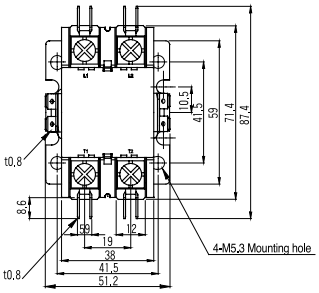	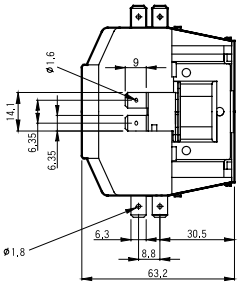 0.26kg

Contactors with delayed open device

Characteristics

The delayed open device maintains the magnetic contactor in the energised condition during voltage drops in the circuit and for up to 4 seconds during power using capacitors.

Ratings

Type		Rate power(kw) (AC 3)			Rated current (A) (AC 3)			Ith AC 1	Aux. contact
Delay open device	Applied contactor	200~240V	380~440V	500~550V	200~240V	380~440V	500~550V	(A)	
AD - 9	GMD - 9	2.5	4	4	11	9	7	20	1NO1NC
	GMD - 12	3.5	5.5	7.5	13	12	12	20	
	GMD - 18	4.5	7.5	7.5	18	18	13	25	
	GMD - 22	5.5	11	15	22	22	22	32	
	GMD - 32	7.5	15	18.5	32	32	28	50	2NO2NC
	GMD - 40	11	18.5	22	40	40	32	60	
AD - 50	GMD - 50	15	22	30	55	50	43	80	
	GMD - 65	18.5	30	37	65	65	60	100	
	GMD - 75	22	37	45	75	75	64	110	
	GMD - 85	25	45	45	85	85	75	135	
AD - 100	GMC - 100	30	55	55	105	105	85	150	
	GMC - 125	37	60	60	125	120	90	150	
	GMC - 150	45	75	90	150	150	140	200	
	GMC - 180	55	90	110	180	180	180	230	
	GMC - 220	75	132	132	220	220	200	260	
AD - 300	GMC - 300	90	160	160	300	300	250	350	
	GMC - 400	125	220	225	400	400	350	420	
AD - 600	GMC - 600	190	330	330	630	630	500	660	
	GMC - 800	220	440	500	800	800	720	800	

Performance

Type	Max. permissible current (A) (AC.3)	Frequency	Endurance		Delay time	Condensor endurance	Operational voltage
			Mec.	Ele.			
GMD - 9~40 + AD - 9 GMD - 50~85+AD - 50	Short circuit : Over10×In Breaking :Over 8×In	600 Operations / hour	5Mil.	1Mil.	1~4sec	〈40˚C : 100,000 〈45˚C : 80,000 〈50˚C : 60,000	AC 200~220V 50Hz / 60Hz
GMC - 100~220 + AD - 100 GMC - 300~400 + AD - 300 GMC - 600~800 + AD - 600				0.5Mil.			

Thermal overload relays

Application

The TOR protect the motors Overload, Locking, Open phase(differential)

Characteristics

① Direct mounting structure

The TOR is mounted directly to the contactor without additional breakets.

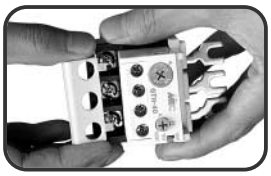

② Safety cover

The finger proof safety cover prevent accidental contact with electric conductor

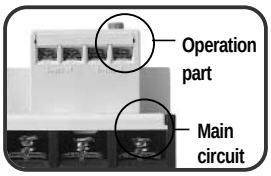

③ Separation of power part and operation part

The main circuit and the operation part are separately designed within the same unit for GTH-22, 40 and 85

④ Easy operation

- **3steps current setting**
  Rotating the reset button using a crosshead screw driver and set the rated current

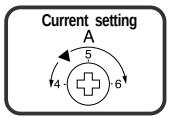

- **Manual / Auto reset setting**
  Manual reset
  Rotate the reset button to the "H" position and this will protrud.
  Auto reset
  Press rotation the reset button to the "A" position.

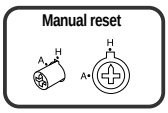

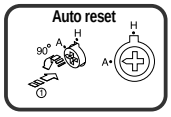

- **Trip / reset indicator**
  If the TOR is tripped, it protrudes 2~3mm and indicates the tripped condition.

TOR-DIN rail adapter kit (AZ-□H)

In case of installing the overload relays independently, the separate mounting kits are available for screw or 35mm Din-rail mounting.
(Applied model : GTH-22, 40, 85)

* Refer to Dimensions on page 65.

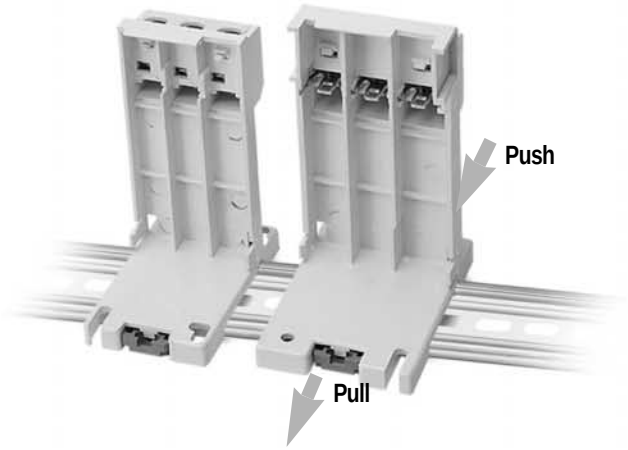

Rating of the Aux.contacts

Type	Rated current (A)				
	AC15			DC13	
	110V	220V	550V	110V	110V
GTH-22, 40, 85	2.5(0.3)	2(0.3)	1(0.3)	0.28(0.28)	0.14(0.14)
GTH-100, 125, 150, 220, 400, 600	2.5(0.3)	2(0.3)	1(0.3)	0.28(0.28)	0.14(0.14)

Note) Are the ratings of NO contact under auto reset mode.

Combination of Contactor and TOR

Contactors	Thermal Overload Relays
GMC - 9	GTH(K) - 22
GMC - 12	
GMC - 18	
GMC - 22	
GMC - 32	GTH(K) - 40
GMC - 40	
GMC - 50	GTH(K) - 85
GMC - 65	
GMC - 75	
GMC - 85	
GMC - 100	GTH(K) - 100
GMC - 125	
GMC - 150	GTH(K) - 150
GMC - 180	GTH(K) - 220
GMC - 220	
GMC - 300	GTH(K) - 400
GMC - 400	
GMC - 600	GTH(K) - 600
GMC - 800	

Settings range selection

GTH(K) series TOR adopt the ADL(Amplified Differential Lever) mechanism and protect motors from overload and phase loss.

Settings range selection

Three phase (4 pole) motor max. power						GTH(K)-22	GTH(K)-40	GTH(K)-85	GTH(K)-100	GTH(K)-150	GTH(K)-220	GTH(K)-400	GTH(K)-600
220V KW	380V KW	415V KW	440V KW	550V KW	660V KW								
●	●	●	●	●	●	0.1~0.16							
●	●	●	●	●	●	0.16~0.25							
●	●	●	●	●	●	0.25~0.4							
●	●	●	●	●	0.37 0.5	0.4~0.63							
●	●	●	●	0.37 0.5	0.55 0.75	0.63~1							
●	0.37 0.5	●	0.55 0.75	0.75 1	1.1 1.5	1~1.6							
0.37 0.5	0.75 1	1.1 1.5	1.1 1.5	1.1 1.5	1.5 2	1.6~2.5							
0.75 1	1.5 2	1.5 2	1.5 2	2.2 3	3 4	2.5~4							
1.1 1.5	2.2 3	2.2 3	2.2 3	3 4	4 5.5	4~6	4~6						
1.5 2	3 4	3.7 5	3.7 5	4 5.5	5.5 7.5	5~8	5~8						
●	●	4 5.5	4 5.5	●	●	6~9	6~9						
2.2 3	4 5.5	4 5.5	4 5.5	5.5 7.5	7.5 10	7~10	7~10	7~10					
3 4	5.5 7.5	5.5 7.5	5.5 7.5	7.5 10	10 13.5	9~13	9~13	9~13					
4 5.5	7.5 10	9 12	9 12	10 13.5	15 20	12~18	12~18	12~18					
5.5 7.5	11 15	11 15	11 15	●	●	16~22	16~22	16~22					
5.5 7.5	11 15	11 15	11 15	15 20	18.5 25		18~26	18~26					
7.5 10	15 20	15 20	15 20	18.5 25	22 30		24~36	24~36					
●	15 20	●	●	18.5 25	●		28~40	28~40					
11 15	22 30	25 35	25 35	30 40	37 50			34~50	34~50	34~50			
15 20	25 35	30 40	30 40	37 50	45 60			45~65	39~57	39~57			
18.5 25	30 40	37 50	37 50	45 60	55 75			54~75	43~65	43~65			
22 30	37 50	45 60	45 60	55 75	63 85			63~85	54~80	54~80			
25 35	51 70	55 75	59 80	63 85	90 125				65~100	65~100	70~100		
30 40	59 80	59 80	63 85	80 110	110 150				85~125	85~125	85~125	85~125	
45 60	80 110	80 110	90 125	100 135	129 175					100~150	100~160	100~160	
55 75	90 125	100 135	110 150	110 150	160 220						120~180	120~180	
63 85	110 150	129 175	140 190	160 220	200 270						160~240	160~240	
80 110	150 205	160 220	160 220	200 270	257 350							220~300	200~300
110 150	185 250	200 270	220 300	257 350	335 455							260~400	260~400
180 245	315 430	355 480	375 510	425 580	500 680								400~600
220 300	400 545	425 580	450 610	500 680	●								520~800
Applied contactors for direct starters						GMC(D)-9 GMC(D)-12 GMC(D)-18 GMC(D)-22	GMC(D)-32 GMC(D)-40	GMC(D)-50 GMC(D)-65 GMC(D)-75 GMC(D)-85	GMC-100 GMC-125	GMC-150	GMC-180 GMC-220	GMC-300 GMC-400	GMC-600 GMC-800

Ratings of auxiliary contacts

Type	Rated current(A)				
	AC15			DC13	
	110V	220V	550V	110V	220V
GTH(K)-22, 40, 85	2.5(0.3)	2(0.3)	1(0.3)	0.28(0.28)	0.14(0.14)
GTH(K)-125, 150, 220, 400, 600	2.5(0.3)	2(0.3)	1(0.3)	0.28(0.28)	0.14(0.14)

Note) Values are the ratings of NO contact under auto reset mode.

TOR Tripping characteristics

GTH(K)-22~85

Type	Cold Starting	Hot operation
GTH(K) - 22	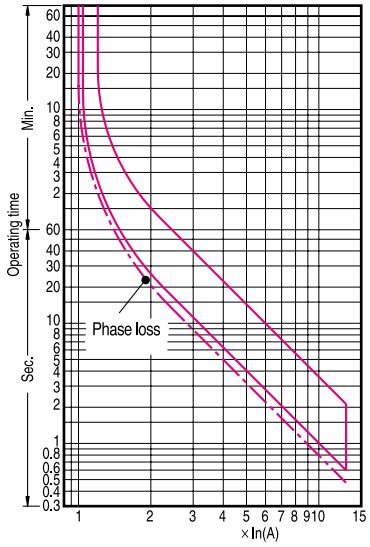	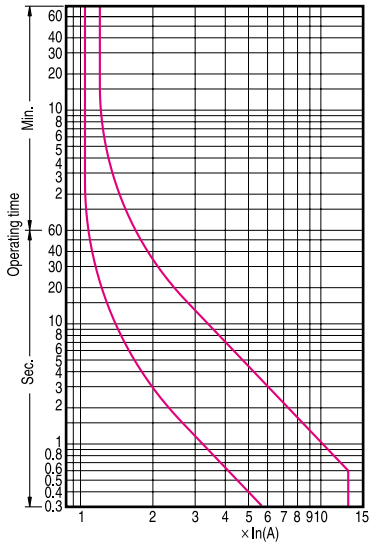
GTH(K) - 40	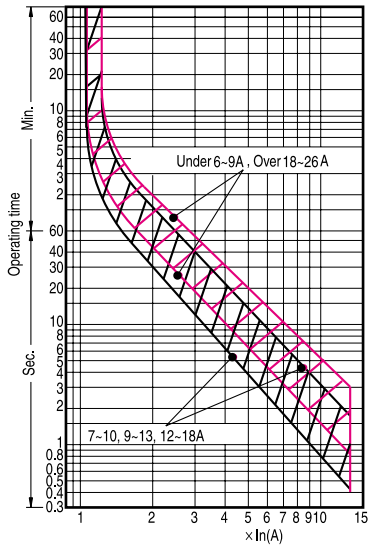	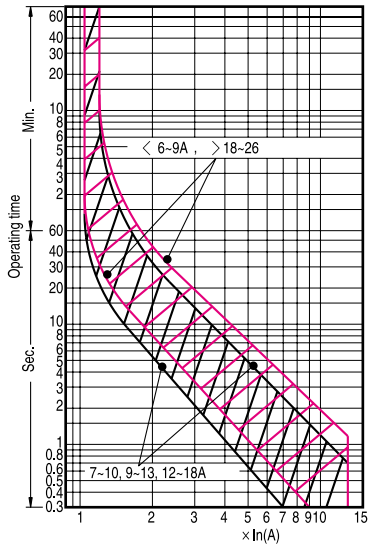
GTH(K) - 85	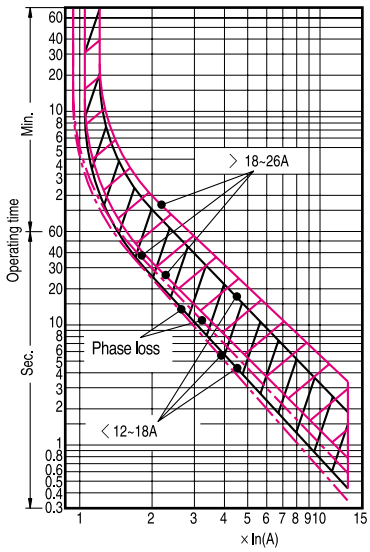	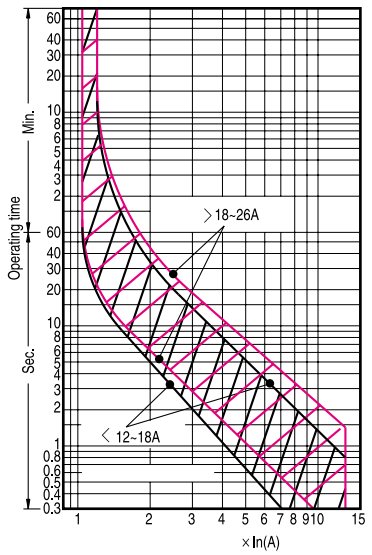

TOR Tripping characteristics

GTH(K)-100~600

Type	Cold Starting	Hot operation
GTH(K) - 100 150	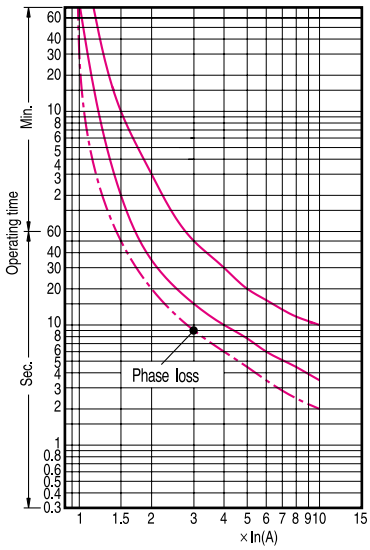	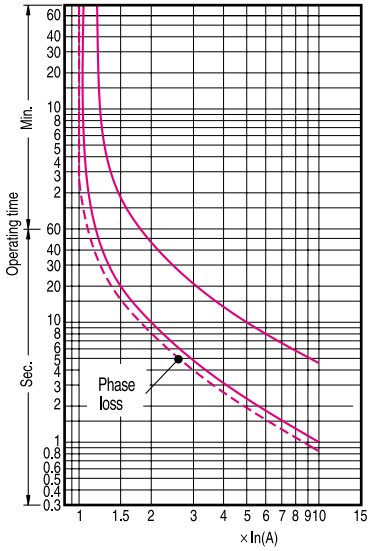
GTH(K) - 220 400	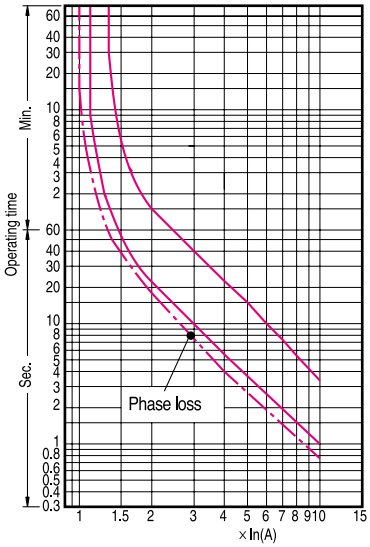	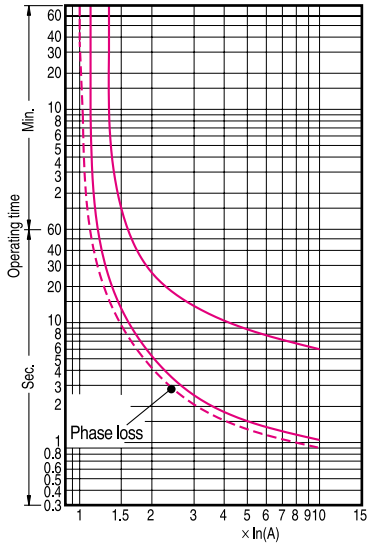
GTH(K) - 600	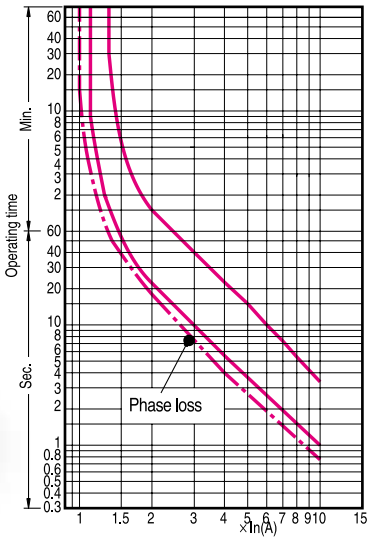	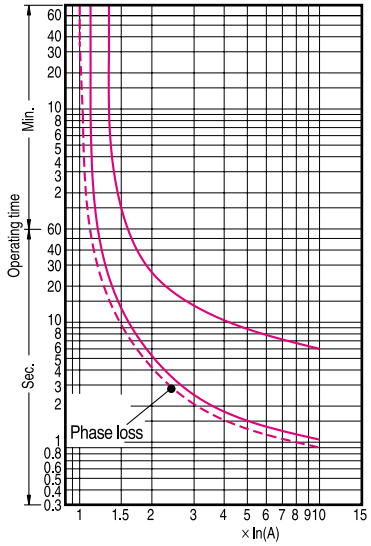

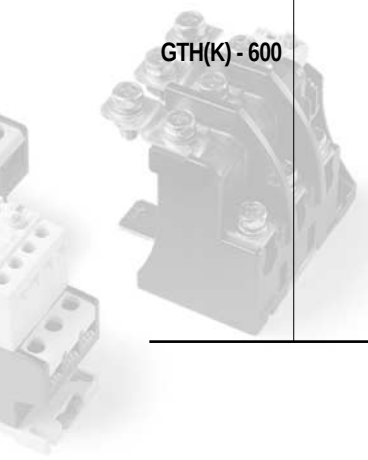

Thermal overload relays (Class 20)

- Applicable to a motor which has long staring time.
  (ex: Blower with high inertia, Fan, Centrifugal seperator)
- Trip class 20 (IEC 60947)

Ratings

Ratings	Type / Norminal current	GTK-22/L	GTK-40/L	GTK-85/L	GTK-100/L	GTK-150/L	GTK-220/L	GTK-400/L	GTK-600/L
Rated current (A)	1.3	1-1.6							
	2.1	1.6~2.5							
	3.3	2.5~4							
	5	4~6	4~6						
	6.5	5~8	5~8						
	7.5	6~9	6~9						
	8.5	7~10	7~10	7~10					
	11	9~13	9~13	9~13					
	15	12~18	12~18	12~18					
	19	16~22	16~22	16~22					
	22		18~26	18~26					
	30		24~36	24~36					
	34		28~40	28~40					
	42 (41) *			34~50	34~50	34~50			
	55 (48) *			45~65	39~57	39~57			
	65 (56) *			54~75	43~65	43~65			
	74 (67)			63~85	54~80	54~80			
	80				65~100	65~100	65~100		
	107				85~125	85~125	85~125	85~125	
	130					100~150	100~160	100~160	
	150						120~180	120~180	
	200						160~240	160~240	
	250							220~300	200~300
	350							260~400	260~400
	500								400~600
	660								520~800
Combination of contactor and TOR		GMC-9 12 18 22	GMC-32 40 48	GMC-50 65 75 85	GMC-100 GMC-125	GMC-150	GMC-180 220	GMC-300 400	GMC-600 800

Note) 1. The norminal currents inside of the brackets ( ) are the nominal currents of the GTK-100/L~600/L

Tripping characteristics

Type	Tripping characteristics	Type	Tripping characteristics
GTK-22/L	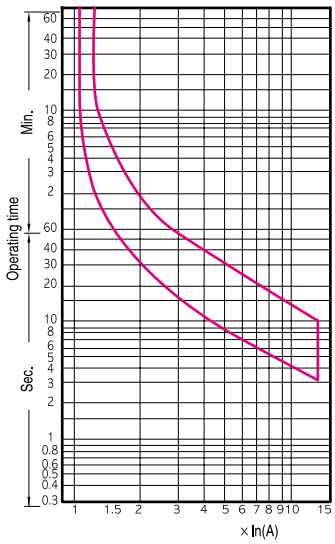	GTK-40/L	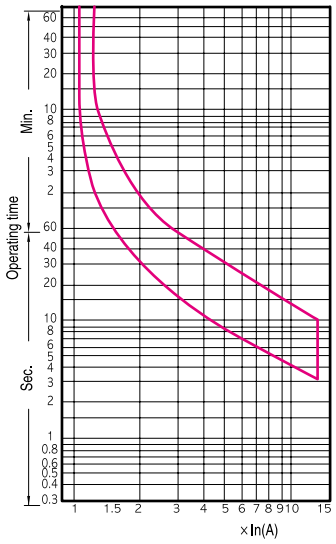
GTK-85/L	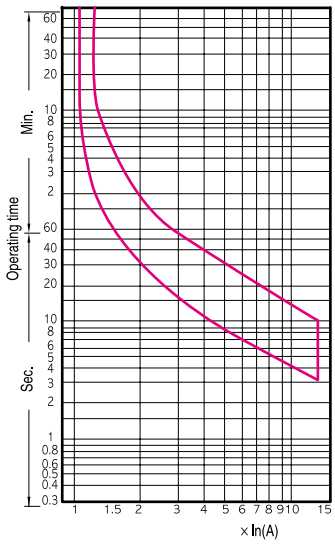	GTK-100/L GTK-150/L	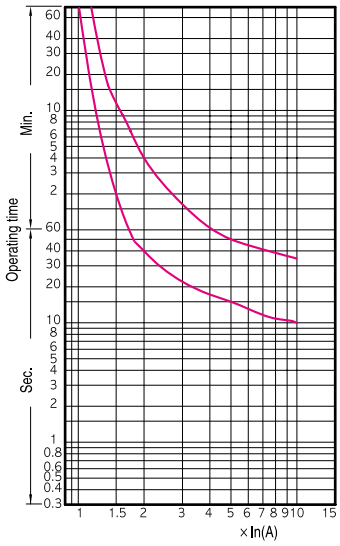
GTK-220/L GTK-400/L	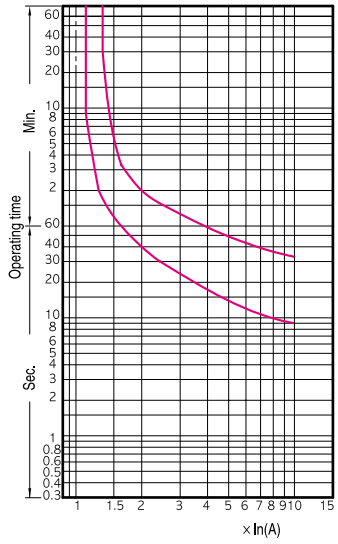	GTK-600/L	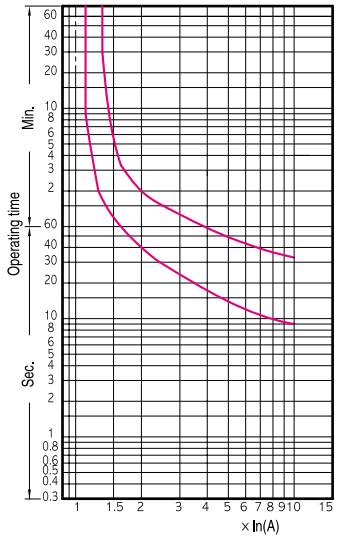

Enclosures for direct starters

Ratings

Type	Rated power (kw)					Rated current (A)			AC1
	1pole		AC 3			AC 3			
	110V	220V	200V~ 220V	380V~ 440V	500V~ 550V	200V~ 220V	380V~ 440V	500V~ 550V	A
GMW - 9	0.4	0.8	2.5	4	4	11	9	7	20
GMW - 12	0.5	1	3.5	5.5	7.5	13	12	12	20
GMW - 18	0.75	1.5	4.5	7.5	7.5	18	18	13	25
GMW - 22	0.9	1.8	5.5	11	15	22	22	22	32
GMW - 32	1.2	-	7.5	15	18.5	32	32	28	50
GMW - 40	1.7	-	11	18.5	22	40	40	32	60
GMW - 50	-	-	15	22	30	55	50	43	80
GMW - 65	-	-	18.5	30	33	65	65	60	100
GMW - 75	-	-	22	37	37	75	75	64	110
GMW - 85	-	-	25	45	45	85	85	75	135
GMW - 100	-	-	30	55	55	105	105	85	150
GMW - 125	-	-	37	60	60	125	120	90	150
GMW - 150	-	-	45	75	90	150	150	140	200
GMW - 180	-	-	55	90	110	180	180	180	230
GMW - 220	-	-	75	132	132	220	220	200	260

Type designation

GMW — **22** — **B** — **AC220V**

- **GMW**: Enclosed type magnetic switches
- **22**: Rated current(440V)

9	2.7kW	75	37kW
12	4kW	85	37kW
18	5.5kW	100	50kW
22	7.5kW	125	60kW
32	11kW	150	75kW
40	15kW	180	90kW
50	22kW	220	110kW
65	30kW		

- **B**: Application

-	Steel case
B	Steel case (push button type)
M	Plastic case
MB	Plastic case (Push button type)

- **AC220V**: Operation voltage — Same with the magnetic contactors

External and mounting dimensions

Type	External and mounting dimensions
GMW - 9~22	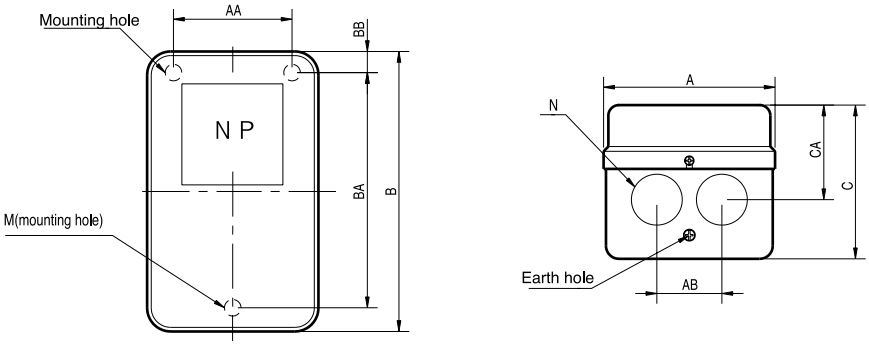
GMW - 32~220	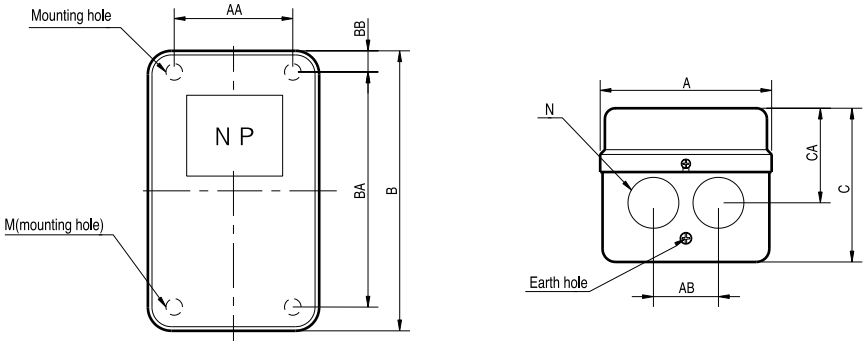

Type	A	AA	AB	B	BA	BB	C	CA	M	N	weight(kg)
GMW-9, 12, 18, 22	104	76	40	170	140	15	114	41	M5	ø 22	1.1
GMW-32, 40	145	95	55	245	165	40	130	50	M5	ø 35	1.7
GMW-50, 65, 75, 85	160	120	74	290	220	35	141	50	M5	ø 35	3.6
GMW-100, 125	230	170	90	380	330	25	190	80	M9	ø 42~50	8.2
GMW-150	230	170	90	380	330	25	190	80	M9	ø 42~50	9
GMW-180	247	200	120	480	400	40	209	85	M9	ø 44~50	16.7
GMW-220	247	200	120	480	400	40	209	85	M9	ø 44~50	16.7

Wiring diagram

GMW - 9~22

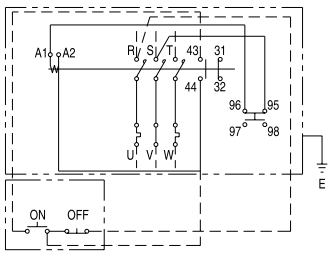

GMW - 32~85

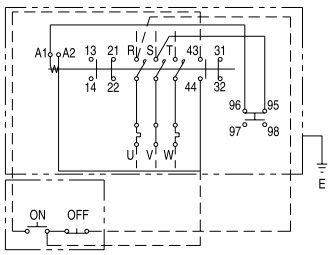

GMW - 100~150

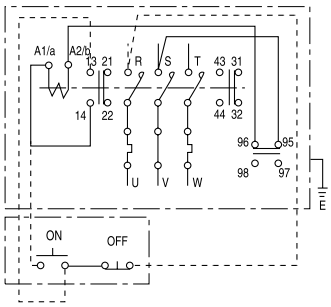

GMW - 180~220

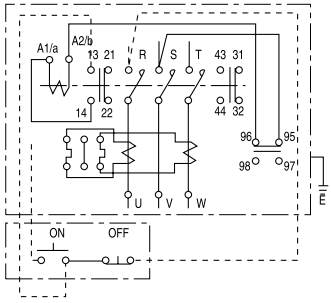

Push button type

[Metal enclosure]

Ratings

Type	Rated power (kw)					Rated current (A)			AC1
	1pole		AC 3			AC 3			
	110V	220V	200V~ 220V	380V~ 440V	500V~ 550V	200V~ 220V	380V~ 440V	500V~ 550V	A
GMW - 9B	0.4	0.8	2.5	4	4	11	9	7	20
GMW - 12B	0.5	1	3.5	5.5	7.5	13	12	12	20
GMW - 18B	0.75	1.5	4.5	7.5	7.5	18	18	13	25
GMW - 22B	0.9	1.8	5.5	11	15	22	22	22	32
GMW - 32B	1.2	-	7.5	15	18.5	32	32	28	50
GMW - 40B	1.7	-	11	18.5	22	40	40	32	60
GMW - 50B	-	-	15	22	30	55	50	43	80
GMW - 65B	-	-	18.5	30	33	65	65	60	100
GMW - 75B	-	-	22	37	37	75	75	64	110
GMW - 85B	-	-	25	45	45	85	85	75	135

External and mounting dimensions

Type	External and mounting dimensions	Wiring diagram
GMW-9B~22B	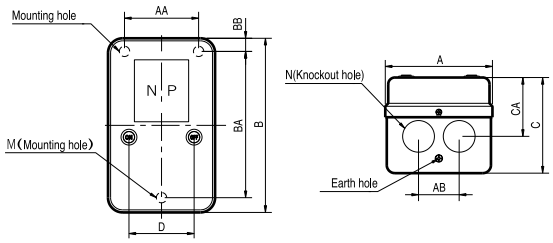	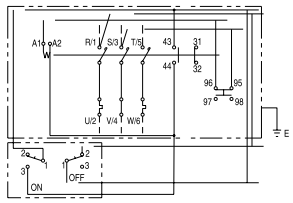
GMW-32B~85B	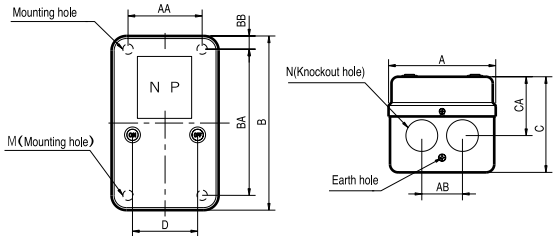	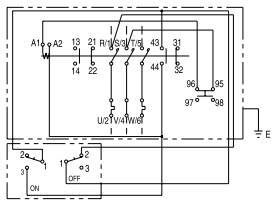

Type	A	AA	AB	B	BA	BB	C	CA	D	M	N	Weight(kg)
GMW - 9B, 12B, 18B, 22B	104	76	40	170	140	15	114	41	59	M5	ø 22	1.1
GMW - 32B, 40B	145	95	55	245	165	40	130	50	97	M5	ø 35	1.7
GMW - 50B, 65B, 75B, 85B	160	120	74	290	220	35	141	50	114	M5	ø 35	3.6

[Plastic enclosure]

Ratings

Type		Rated power(kW)					Rated current(A)			AC1
		1pole		AC 3			AC 3			
Without Push button	Push button type	110V	220V	200V~ 220V	380V~ 440V	500V~ 550V	200V~ 220V	380V~ 440V	500V~ 550V	A
GMW - 9M	GMW - 9MB	0.4	0.8	2.5	4	4	11	9	7	20
GMW - 12M	GMW - 12MB	0.5	1	3.5	5.5	7.5	13	12	12	20
GMW - 18M	GMW - 18MB	0.75	1.5	4.5	7.5	7.5	18	18	13	25
GMW - 22M	GMW - 22MB	0.9	1.8	5.5	11	15	22	22	22	32

External and mounting dimensions

Type	EXternal and mounting dimension	
GMW-9M~22M	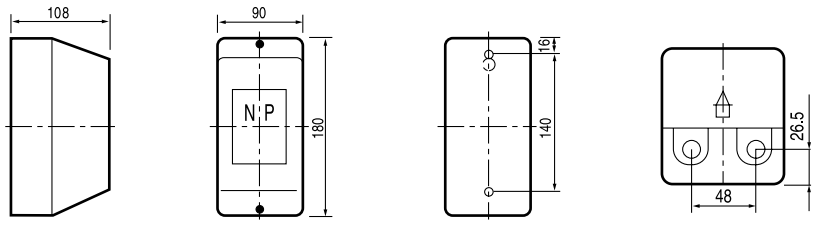 GMW-9M, 12M: 0.83kg GMW-18M, 22M: 0.88kg	
GMW-9M~22MB	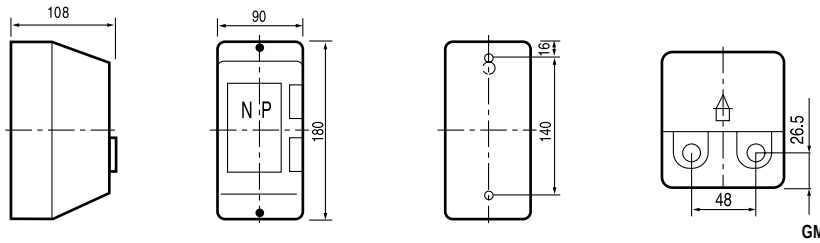 GMW-9MB,12MB: 0.83kg GMW-18MB,22MB: 0.88kg	
	GMW-9M~22M	GMW-9MB~22MB
Wiring diagram	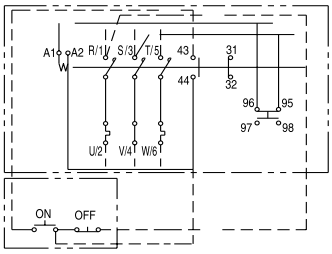	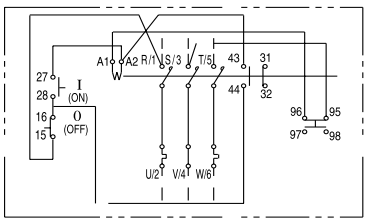

Dimensions and wiring diagrams

3-pole contactors

GMC-9~85

Type	Dimensions	Mounting
GMC - 9 GMC - 12 GMC - 18 GMC - 22	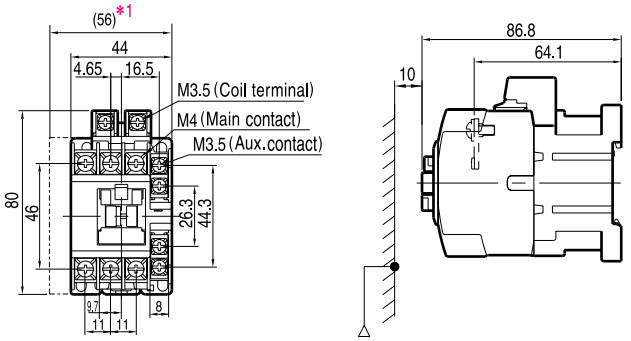	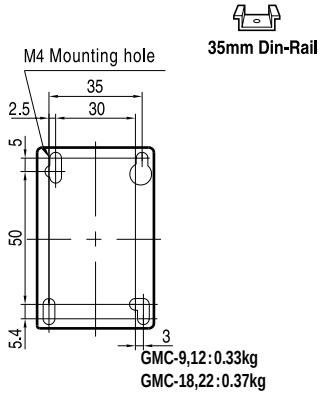
GMC - 32 GMC - 40	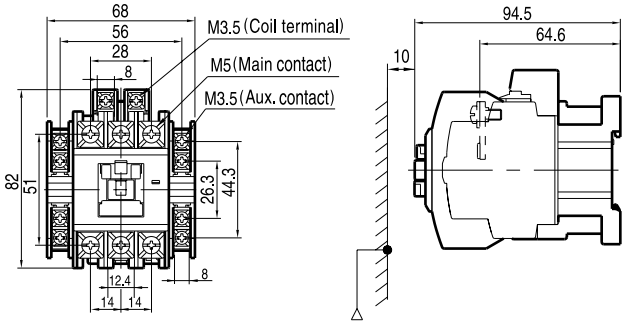	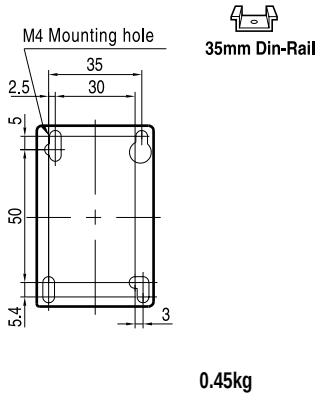
GMC - 50 GMC - 65 GMC - 75 GMC - 85	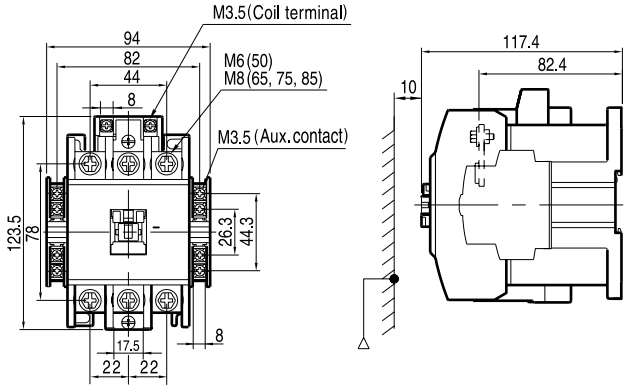	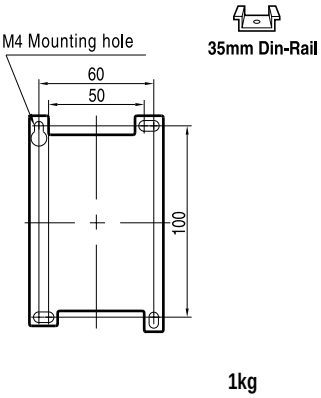

	GMC - 9 ~ 22	GMC - 32 ~ 40
Wiring diagram	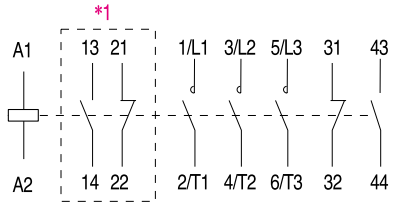	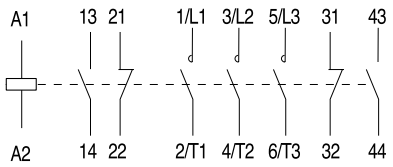

Note) *1. Aux. contacts 2NO 2NC

3-pole contactors

GMD-9~85

Type	Dimensions	Mounting
GMD - 9 GMD - 12 GMD - 18 GMD - 22	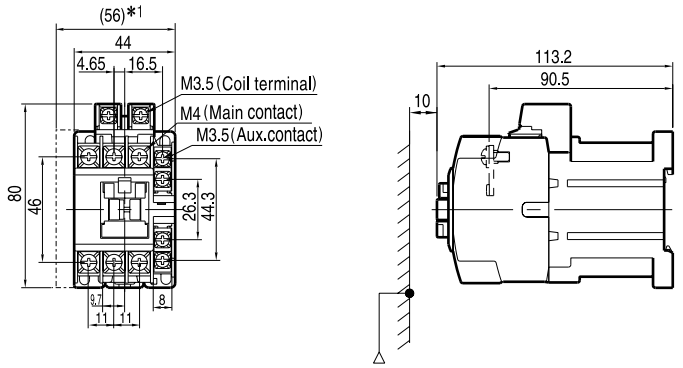	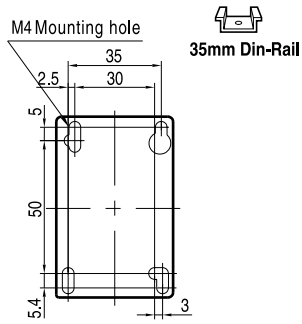 GMD-9,12 : 0.55kg GMD-18,22 : 0.59kg
GMD - 32 GMD - 40	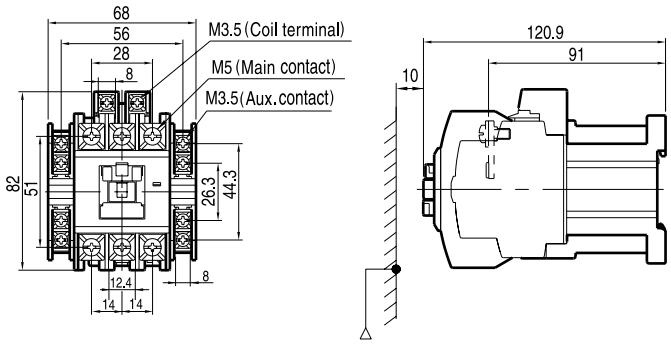	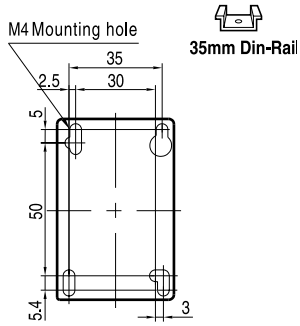 0.67kg
GMD - 50 GMD - 65 GMD - 75 GMD - 85	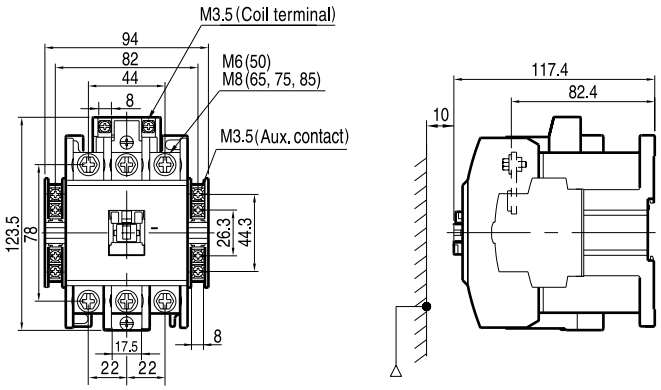	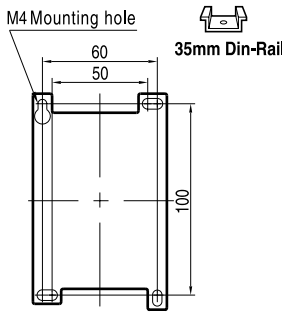 1.06kg

Wiring diagram	GMD - 9 ~ 22	GMD - 32 ~ 85
	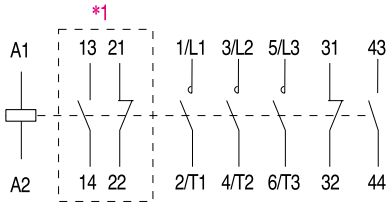 Note) *1. Aux. contacts 2NO 2NC	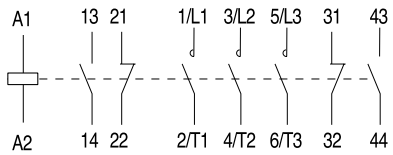 **GMD - 50 ~ 85** 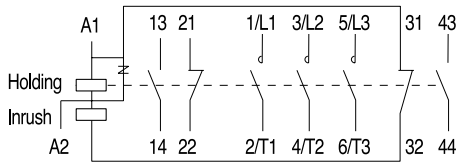

3-pole contactors

GMC-100~220

Type	External	Mounting
GMC - 100 GMC - 125	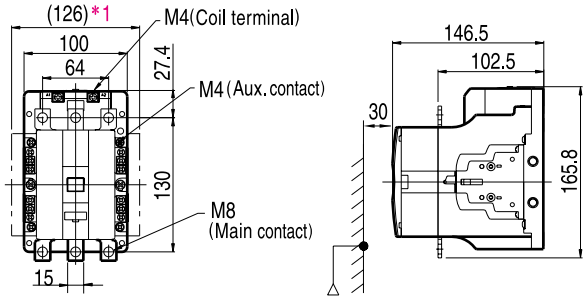	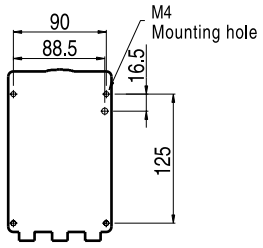 2.9kg
GMC - 150	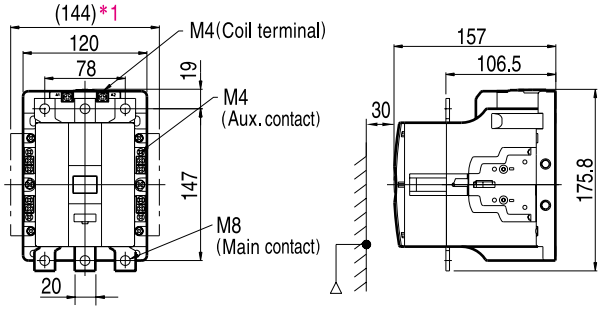	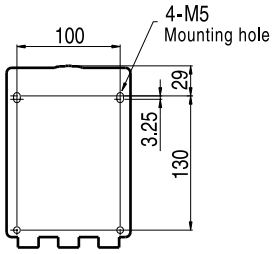 3.4kg
GMC - 180 GMC - 220	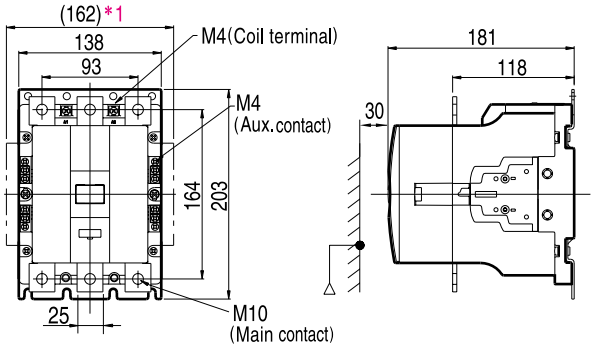	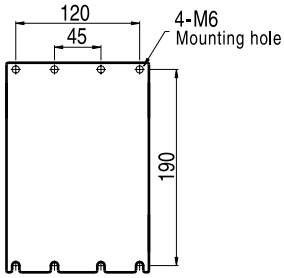 5.4kg
Wiring diagram	GMC - 100 ~ 220	

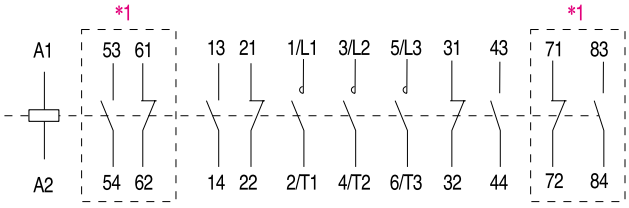

Note) *1. Aux. contacts 4NO 4NC

3-pole contactors

GMC-300~800

Type	Dimensions	Mounting
GMC - 300 GMC - 400	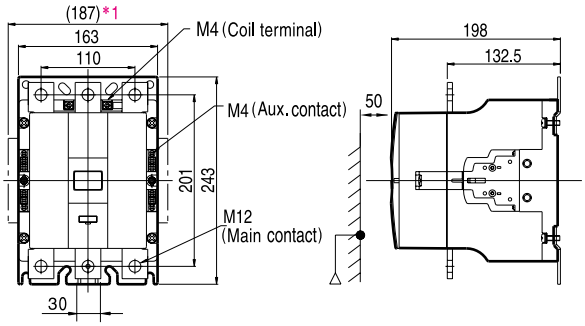	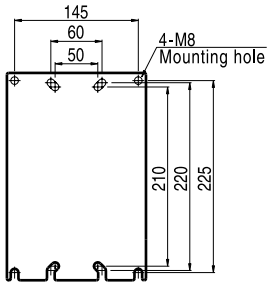 9.2kg
GMC - 600 GMC - 800	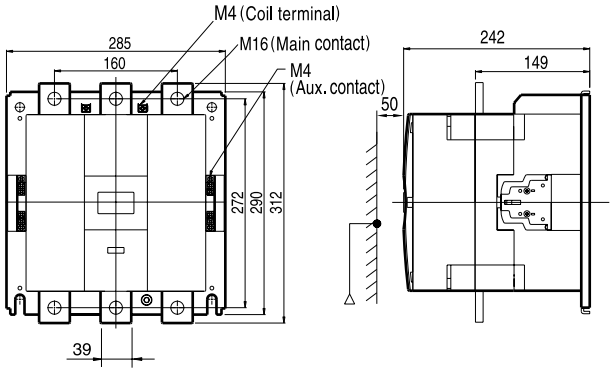	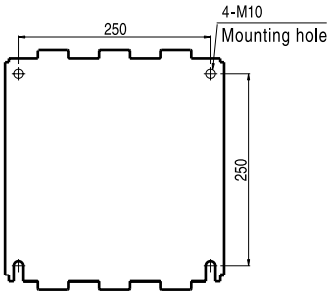 22.4kg
Wiring diagram	GMC - 300 ~ 800	

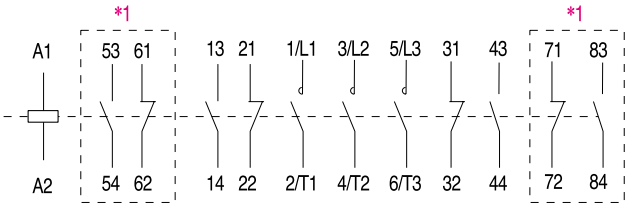

Note) *1. Aux. contacts 4NO 4NC

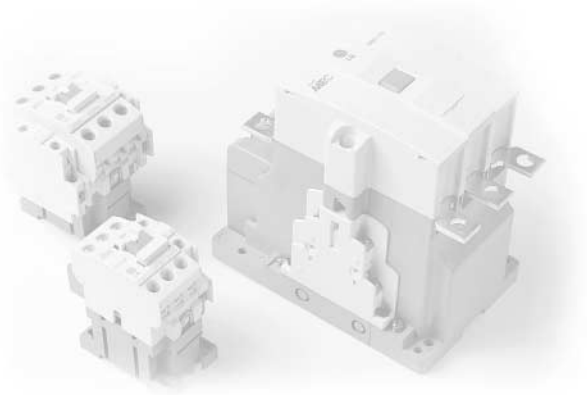

Direct starters

GMS-9~85

Type	External	Mounting
GMS - 9 GMS - 12 GMS - 18 GMS - 22	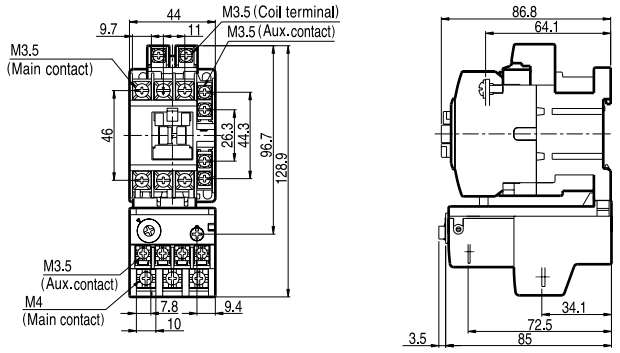	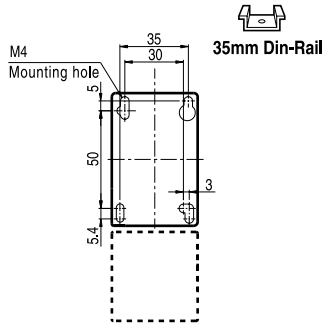 GMC-9, 12 + GTH(K) : 0.46kg GMC-18, 22 + GTH(K): 0.5kg
GMS - 32 GMS - 40	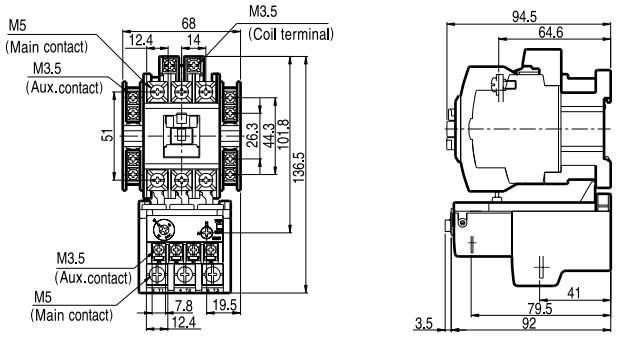	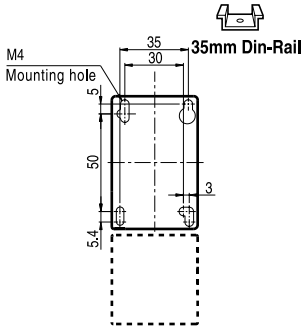 0.65kg
GMS - 50 GMS - 65 GMS - 75 GMS - 85	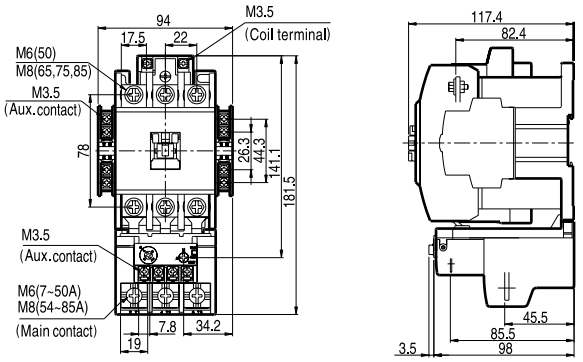	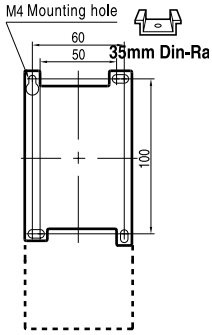 1.12kg

	GMS - 9~22	GMS - 32~150	GMS - 180~800
Wiring diagram	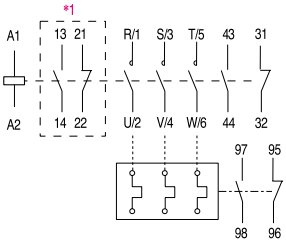 Note) *1. Aux. contacts 2NO 2NC	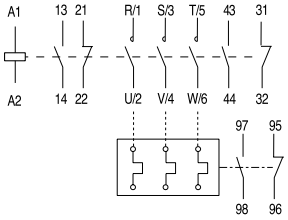	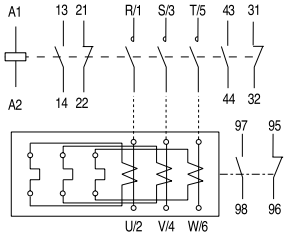

Direct starters

GMS-100~800

Type	External	Mounting
GMS - 100 GMS - 125	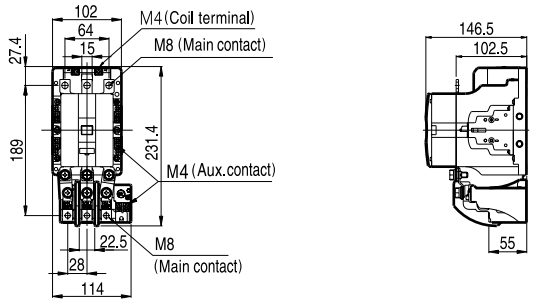	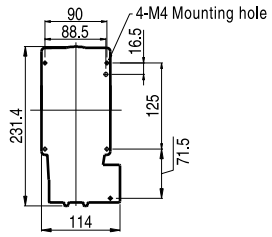 3.4kg
GMS - 150	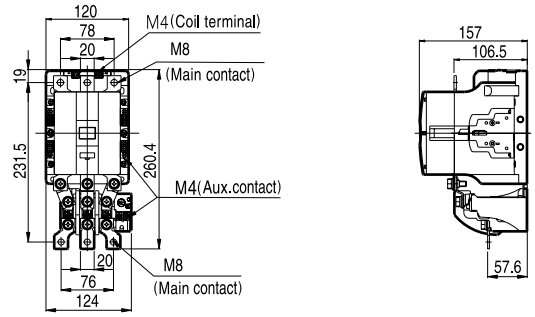	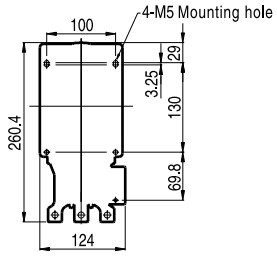 4kg
GMS - 180 GMS - 220	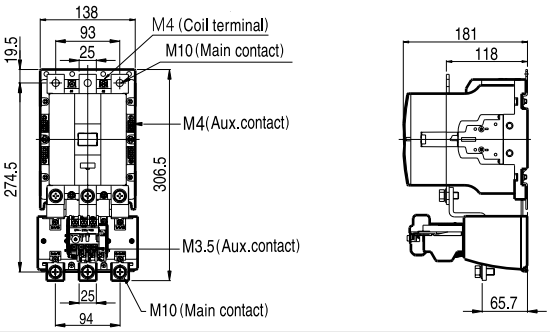	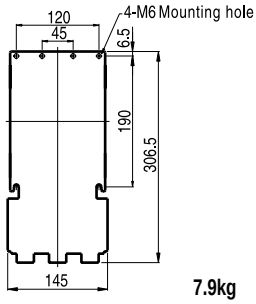 7.9kg
GMS - 300 GMS - 400	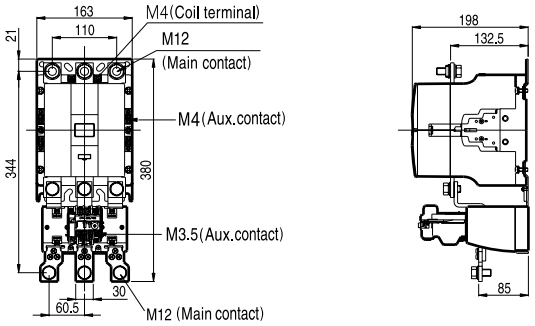	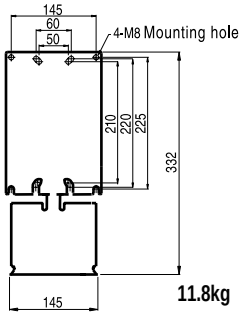 11.8kg
GMS - 600 GMS - 800	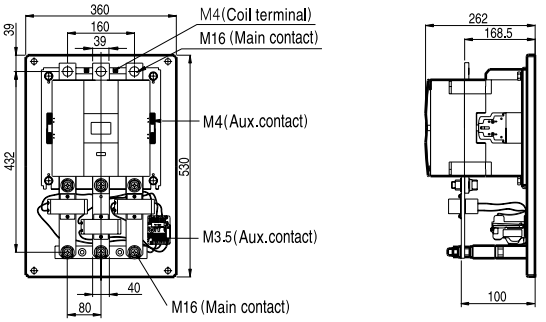	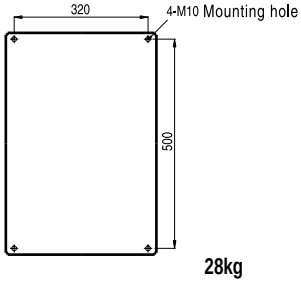 28kg

4-pole contactors

GMC-9/4~85/4

Type	External	Mounting
GMC -9/4 GMC - 12/4	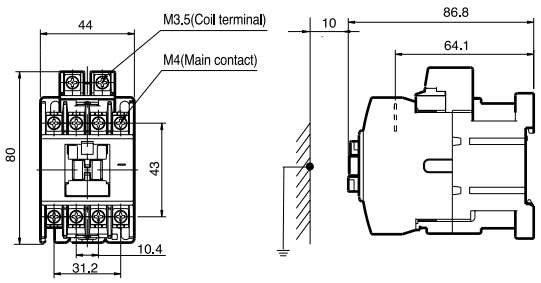	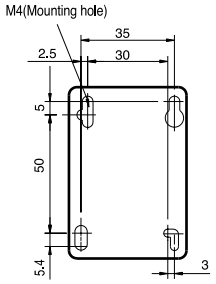 35mm Din-Rail 0.33kg
GMC - 18/4 GMC - 22/4	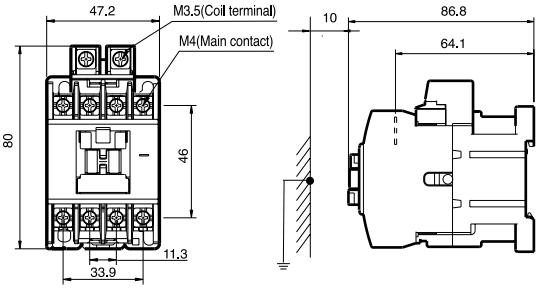	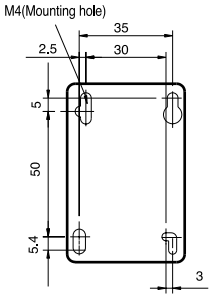 35mm Din-Rail 0.4kg
GMC - 32/4 GMC - 40/4	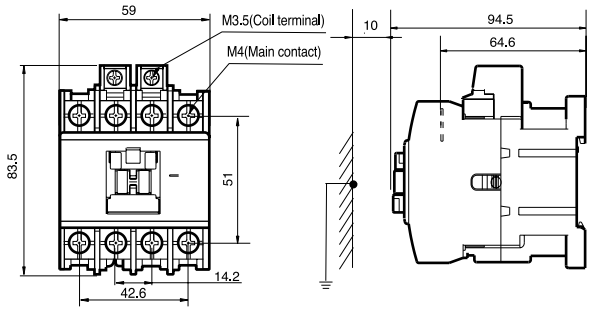	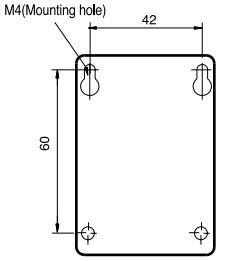 35mm Din-Rail 0.59kg
GMC - 50/4 GMC - 65/4 GMC - 75/4 GMC - 85/4	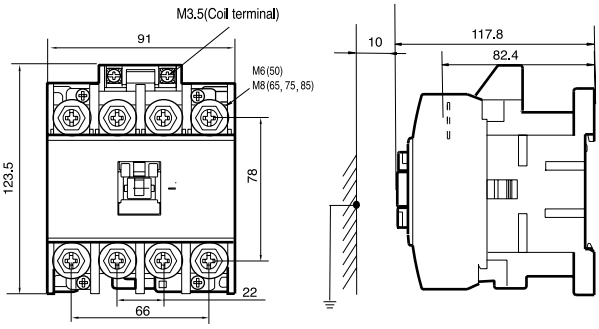	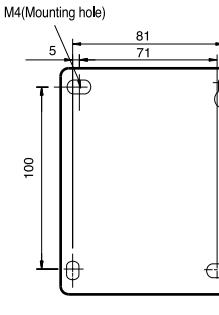 35mm Din-Rail 1.2kg
	GMC - 9/4 ~ 85/4	
Wiring diagram	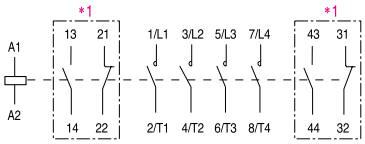 Note) *1. Aux. contacts 2NO 2NC	

4-pole contactors

GMC-100/4~800/4

Type	External	Mounting
GMC - 100/4 GMC - 125/4 GMC - 150/4 GMC - 180/4 GMC - 220/4	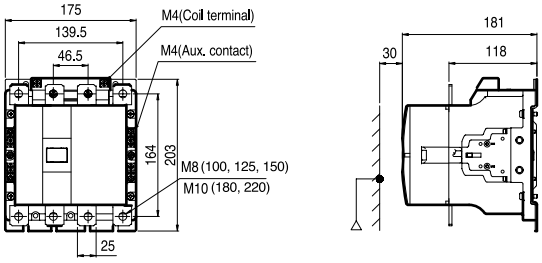	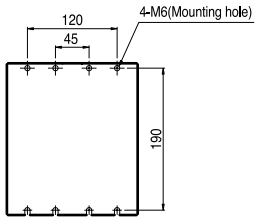 5.6kg
GMC - 300/4 GMC - 400/4	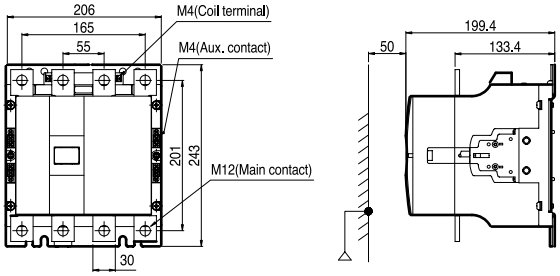	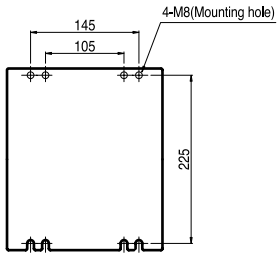 9.9kg
GMC -600/4 GMC - 800/4	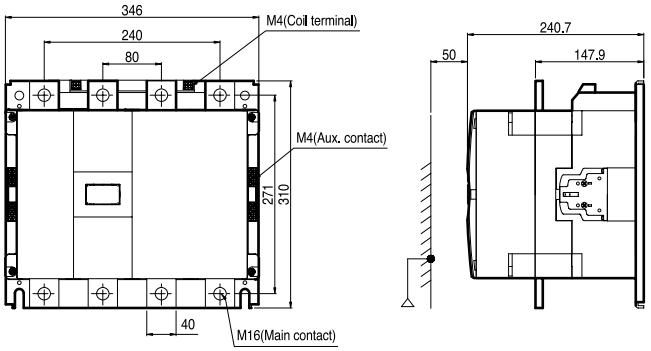	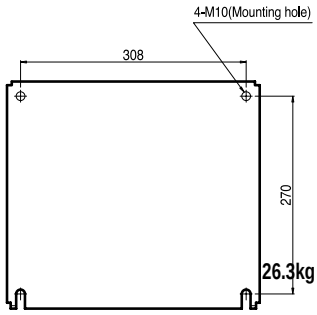 26.3kg
Wiring diagram	GMC - 100/4~800/4 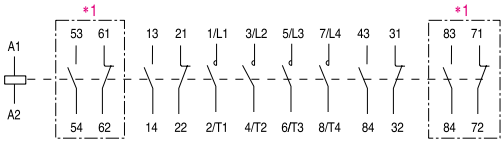 Note) *1. Aux. contacts 4NO 4NC	

4-pole contactors

GMD-9/4~85/4

Type	External	Mounting
GMD - 9/4 GMD - 12/4 GMD - 18/4 GMD - 22/4	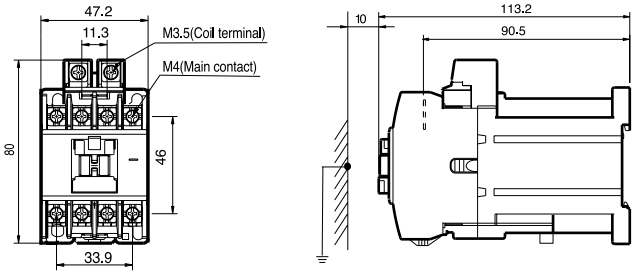	35mm Din-Rail 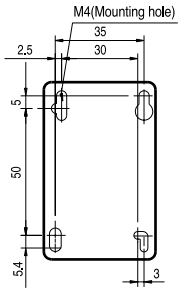 0.5kg
GMD - 32/4 GMD - 40/4	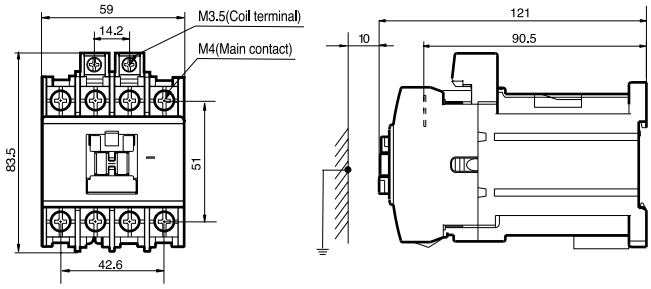	35mm Din-Rail 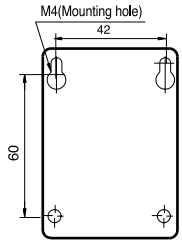 0.7kg
GMD - 50/4 GMD - 65/4 GMD - 75/4 GMD - 85/4	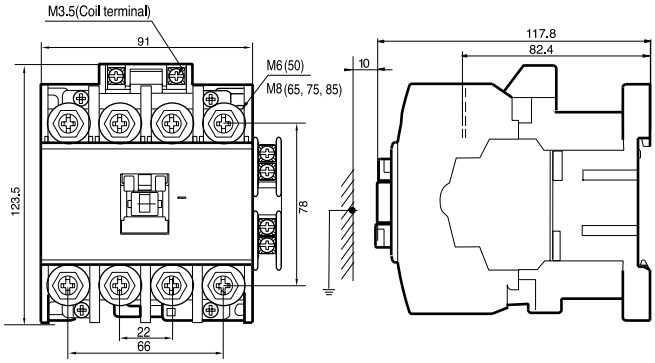	35mm Din-Rail 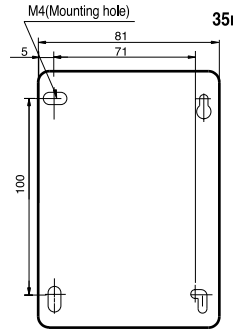 1.29kg

	GMD - 9/4 ~ 40/4	GMD - 50/4 ~ 85/4
Wiring diagram	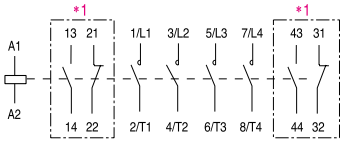 Note) *1. Aux. contacts 2NO 2NC	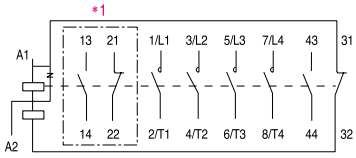 Note) *1. Aux. contacts 2NO 2NC

Contactor relays

GMR-4~8

Type	External	Mounting
GMR - 4	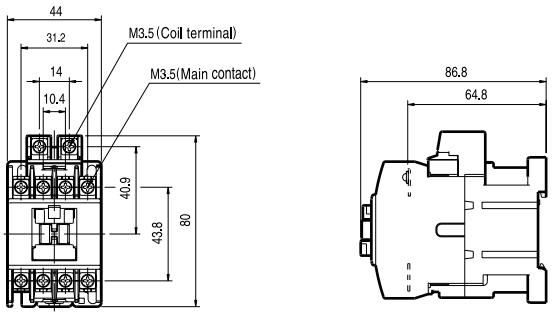	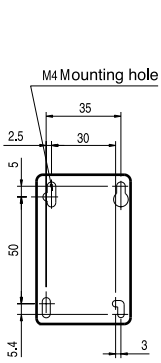 0.33kg
GMR - 6	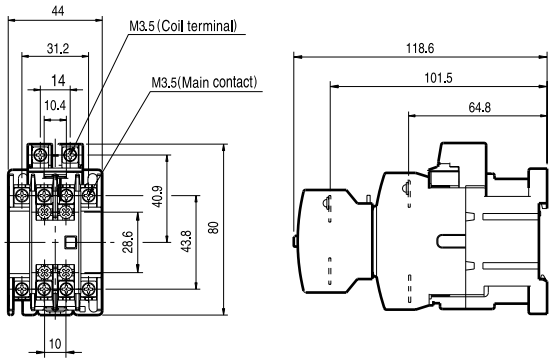	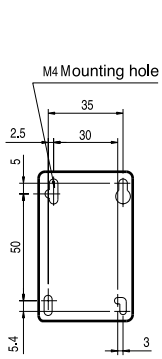 0.36kg
GMR - 8	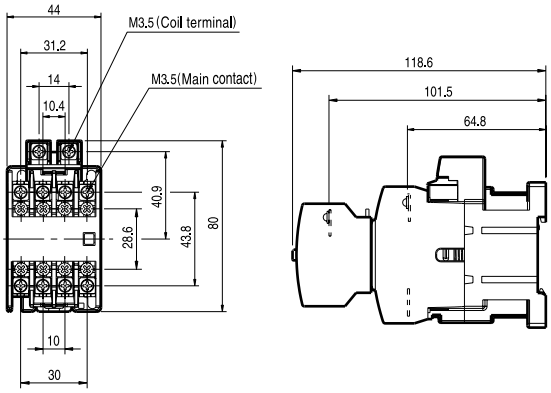	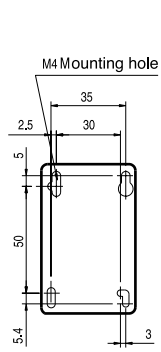 0.38kg

Wiring diagram

GMR - 4

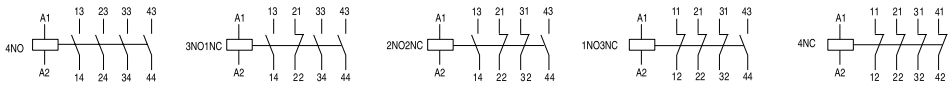

GMR - 6

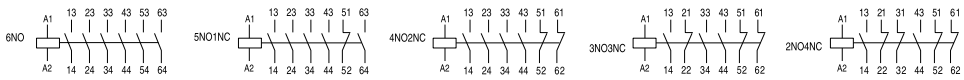

GMR - 8

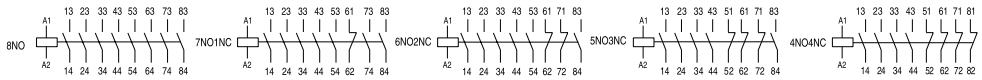

Contactor relays

GMR-4D~8D

Type	External	Mounting
GMR - 4D	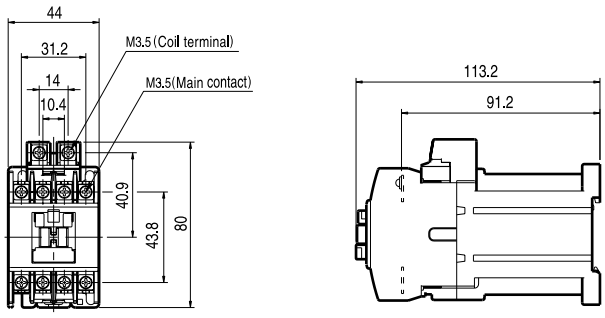	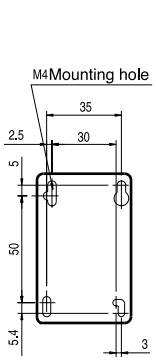 0.55kg
GMR - 6D	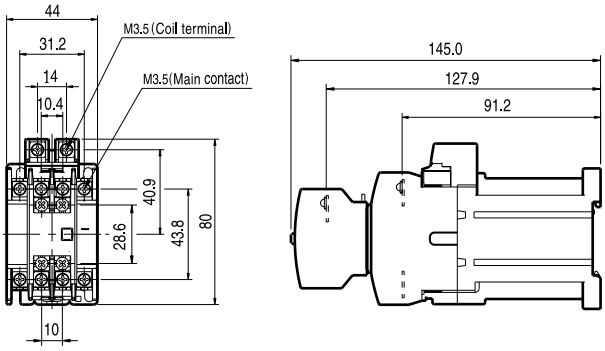	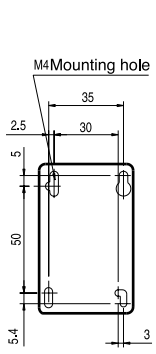 0.57kg
GMR - 8D	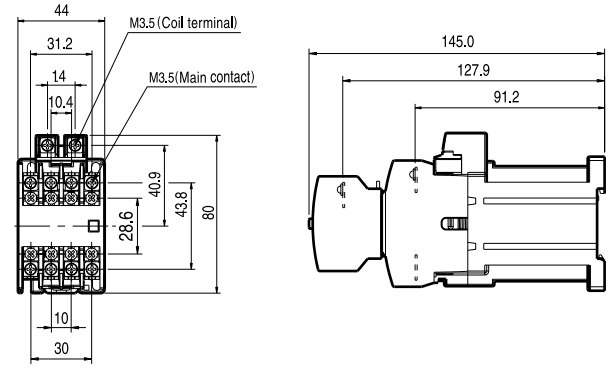	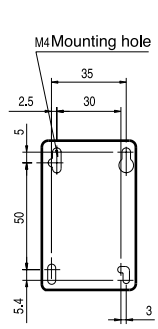 0.59kg

Wiring diagram

GMR - 4D

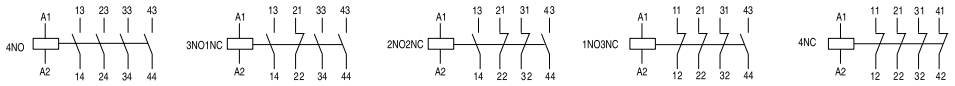

GMR - 6D

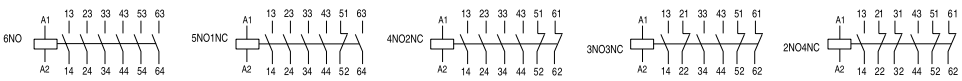

GMR - 8D

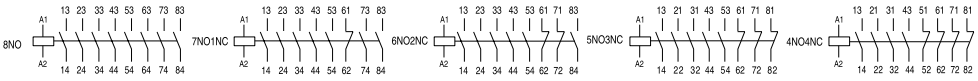

Auxiliary contact blocks (Top mounting)

AU-2, 4

Type	External
AU - 2	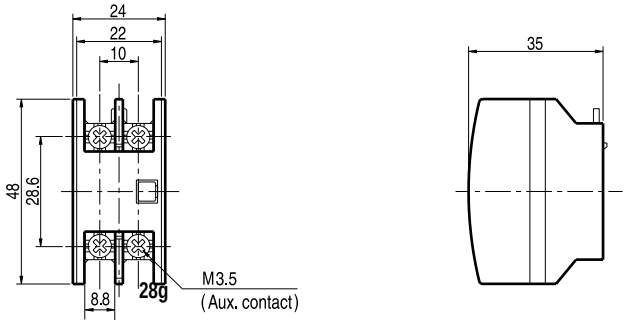 50g
AU - 4	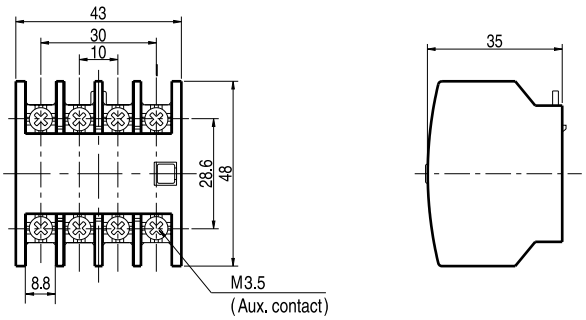 45g
Wiring diagram — AU - 2	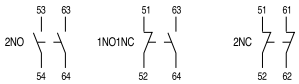
Wiring diagram — AU - 4	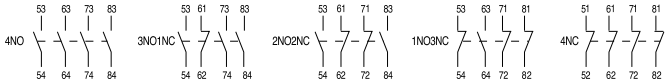

Auxiliary contact blocks (Side mounting)

Type	External and mounting	Contacts available
AU - 1	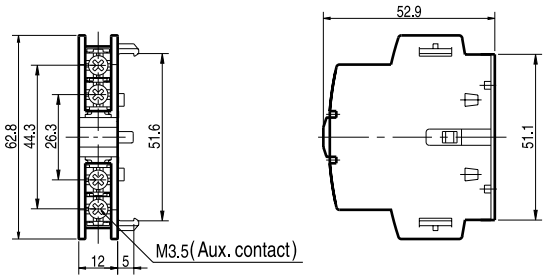 33g	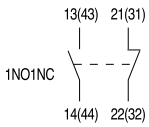
AU - 100	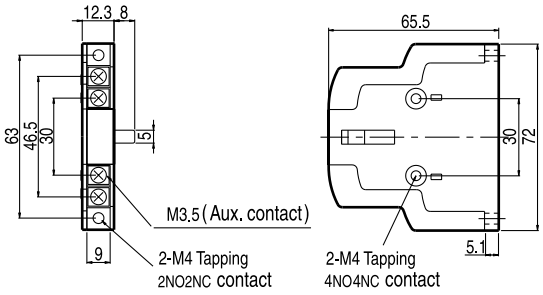 45g	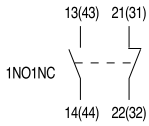

3-pole Reversing contactors

GMC(D)-9R~85R

Type	External	Mounting
GMC(D) - 9R GMC(D) - 12R GMC(D) - 18R GMC(D) - 22R	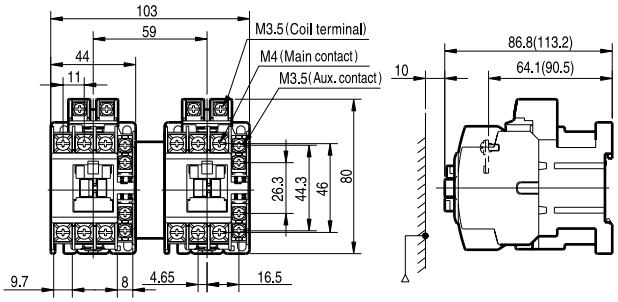	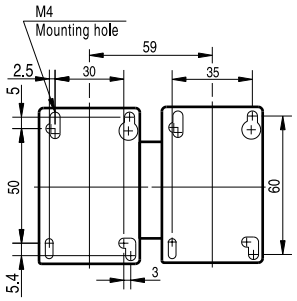 GMC(D)-9R, 12R: 0.69(1.13)kg GMC(D)-18R, 22R: 0.77(1.21)kg
GMC(D) - 32R GMC(D) - 40R	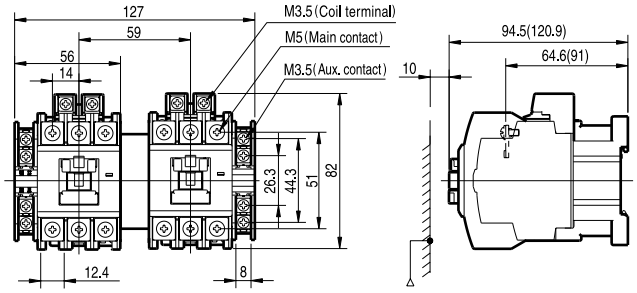	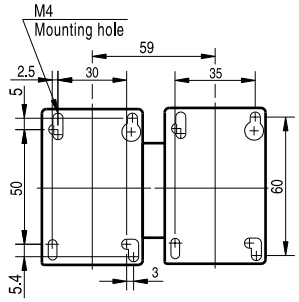 1.0(1.44)kg
GMC(D) - 50R GMC(D) - 65R GMC(D) - 75R GMC(D) - 85R	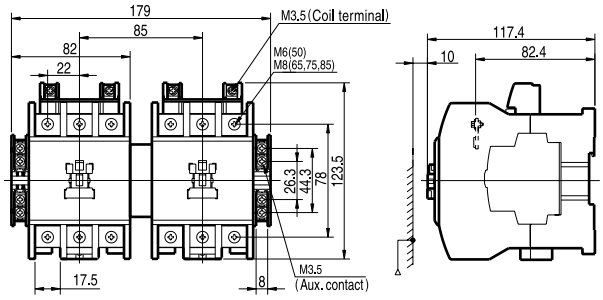	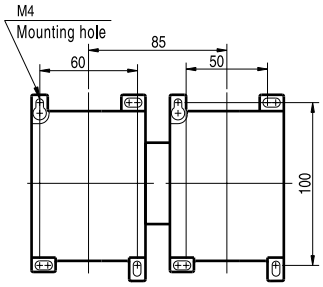 2.1(2.2)kg

	GMC - 9R~22R	GMC - 32R~85R
Wiring diagram	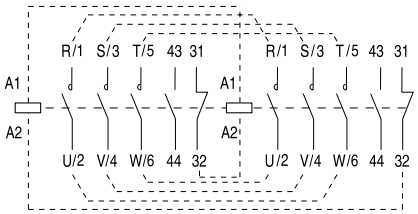 Note) *( ) are the values for DC coil type.	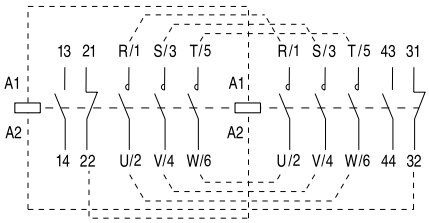

3-pole Reversing contactors

GMC-100R~400R

Type	External	Mounting
GMC - 100R GMC - 125R	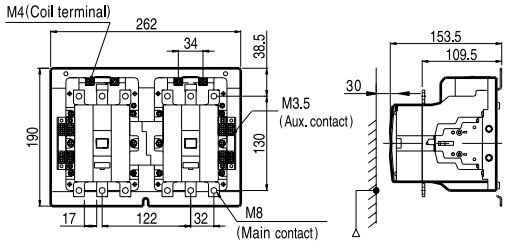	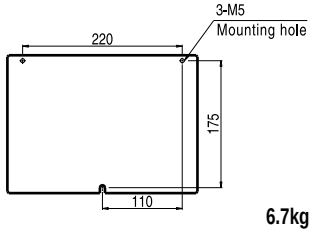 6.7kg
GMC - 150R	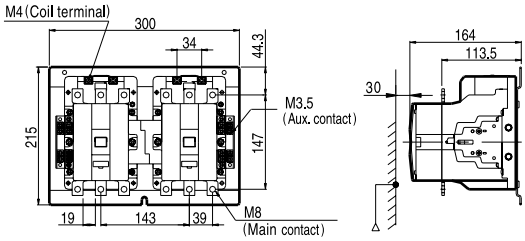	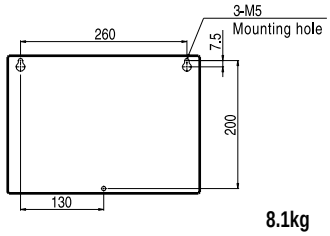 8.1kg
GMC - 180R GMC - 220R	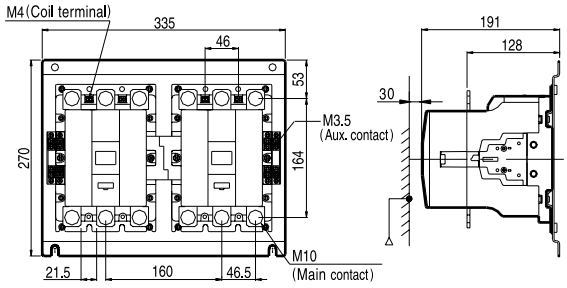	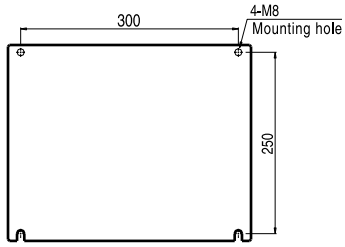 12.9kg
GMC - 300R GMC - 400R	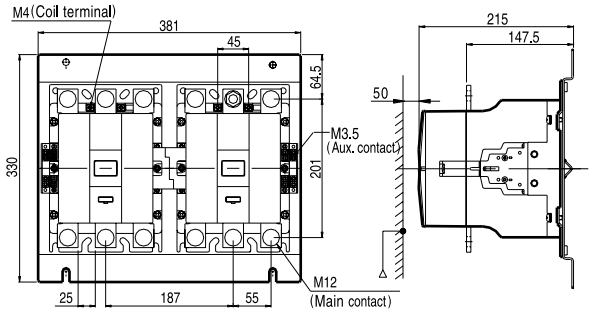	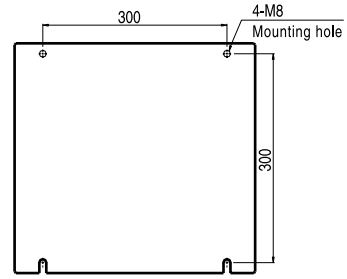 21.4kg
GMC - 600R GMC - 800R	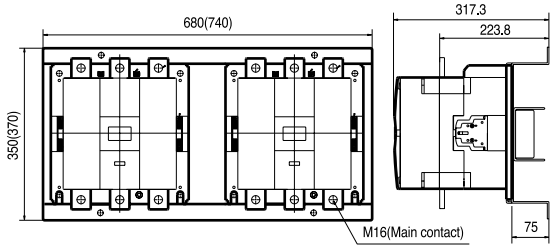	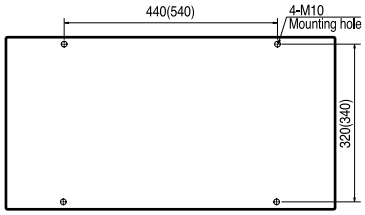
Wiring diagram	**GMC 100R ~ 800R** 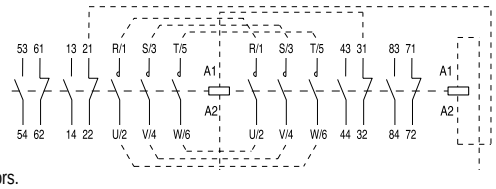 Note) *( ) values for 4-pole contactors.	

3, 4-pole Reversing contactors

GMC(D)-100(/4)RV~400(/4)RV

Type	External	Mounting
GMC - 100RV GMC - 125RV	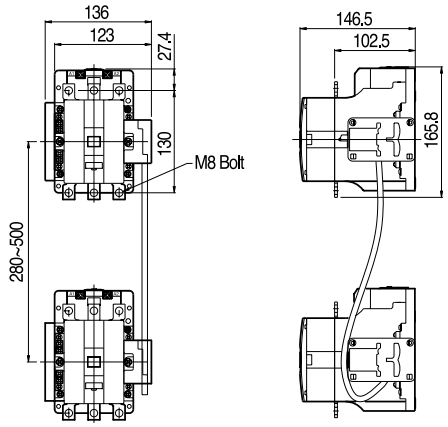	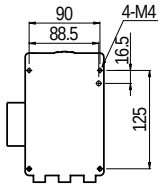 2.9kg
GMC - 150RV	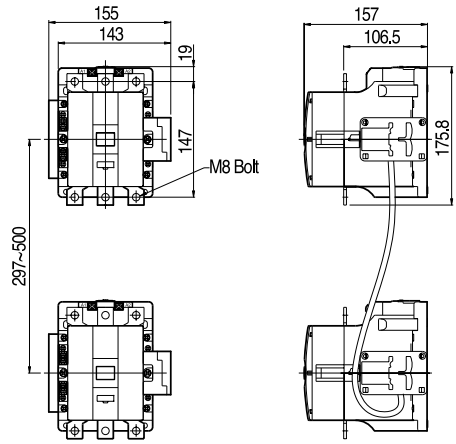	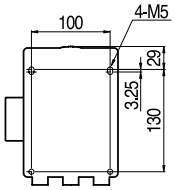 3.4kg
GMC - 180RV GMC - 220RV GMC - 100/4RV GMC - 125/4RV GMC - 150/4RV GMC - 180/4RV GMC - 220/4RV	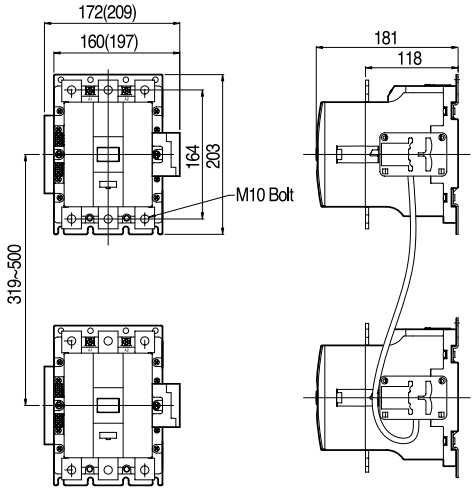	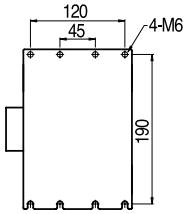 5.4kg

3, 4-pole Reversing contactors

GMC(D)-300(/4)RV~800(/4)RV

Type	External	Mounting
GMC - 300RV GMC - 400RV GMC - 300/4RV GMC - 400/4RV	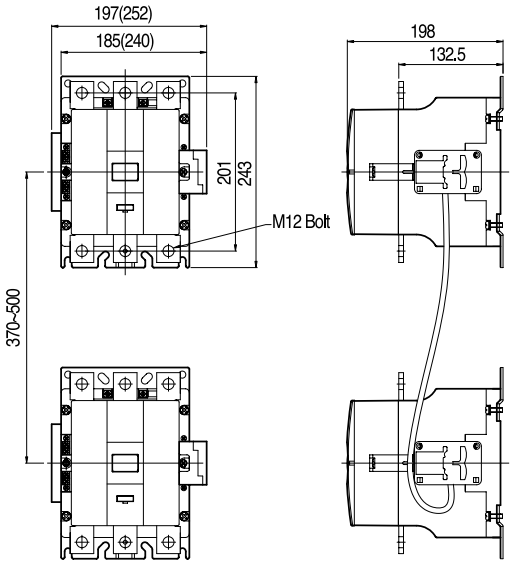	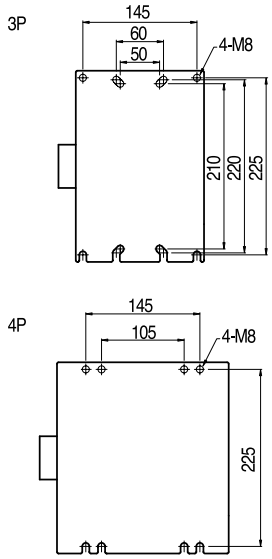
GMC - 600RV GMC - 800RV GMC - 600/4RV GMC - 800/4RV	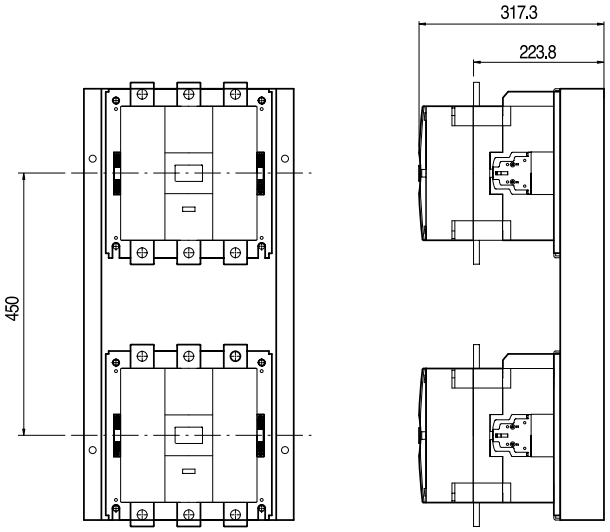	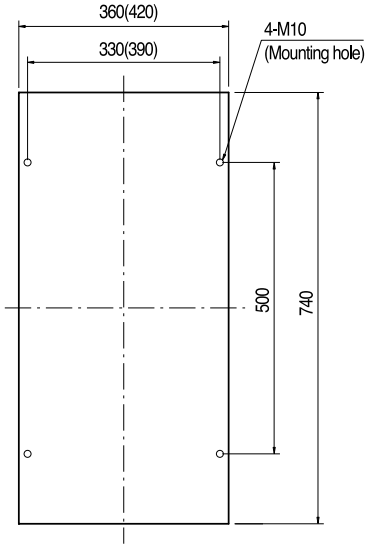
Wiring diagram	GMC 100 ~ 600RV	GMC 100 ~ 600/4RV
	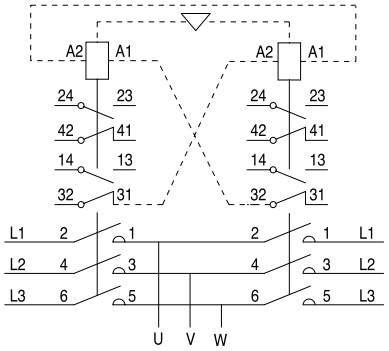	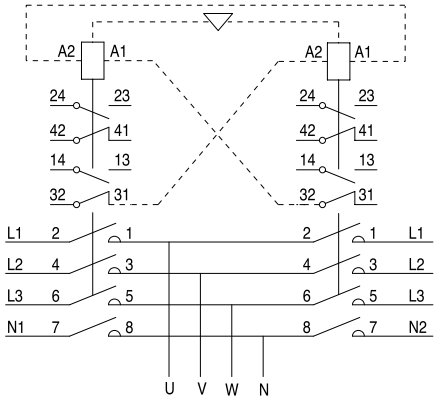

4-pole Reversing contactors

GMC(D)-9R/4~85R/4

Type	External	Mounting
GMC - 9R/4 GMC - 12R/4	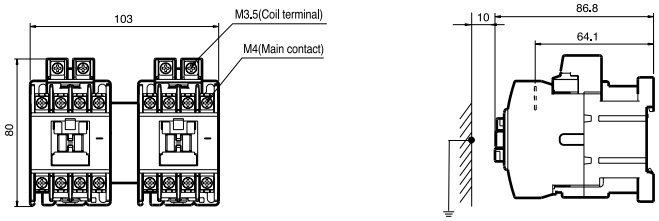	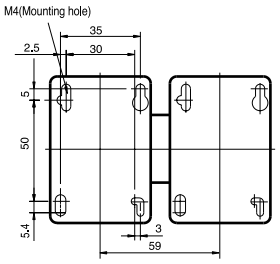 35mm Din-Rail 3.33kg
GMD - 9R/4 GMD - 12R/4 GMD- 18R/4 GMD - 22R/4	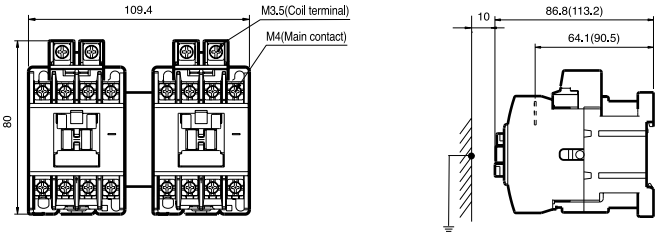	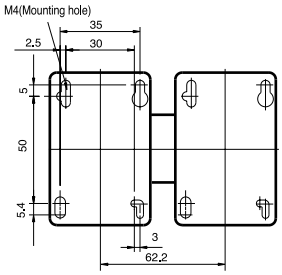 35mm Din-Rail 0.4kg
GMC(D) - 32/4 GMC(D)- 40/4	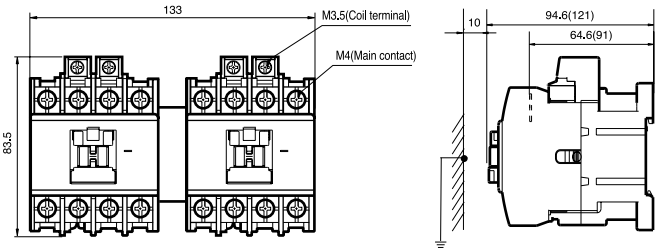	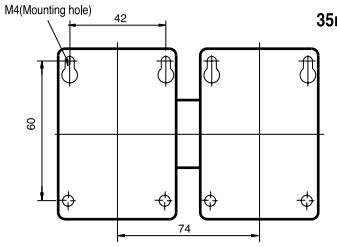 35mm Din-Rail 0.59kg
GMC(D) - 50/4 GMC(D) - 65/4 GMC(D)- 75/4 GMC(D) - 85/4	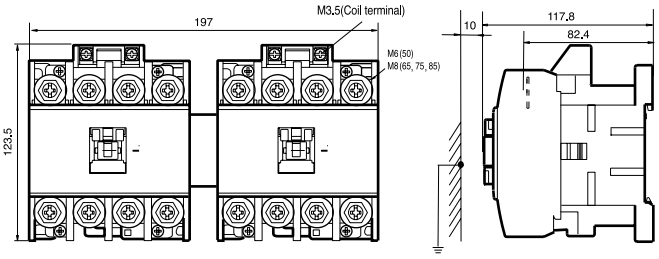	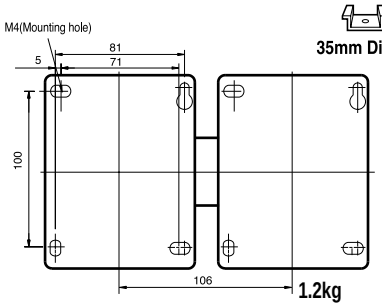 35mm Din-Rail 1.2kg
Wiring diagram	GMC - 19/4~85/4 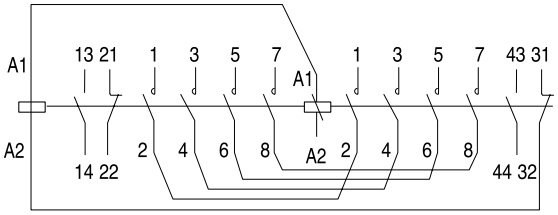	

4-pole Reversing contactors

GMC-100R/4~800R/4

Type	External	Mounting
GMC - 100/4R GMC - 125/4R GMC - 150/4R GMC - 180/4R GMC - 220/4R	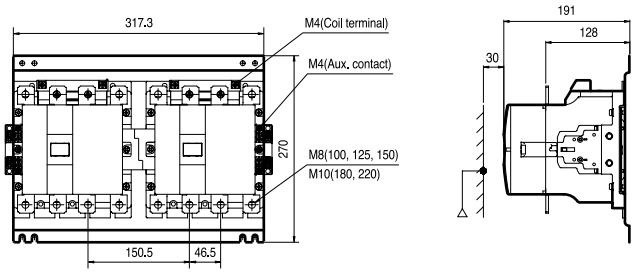	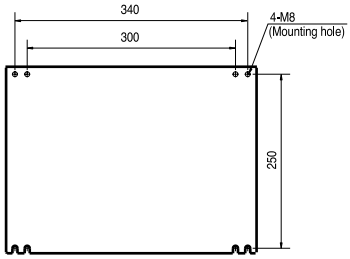 5.6kg
GMC - 300/4R GMC - 400/4R	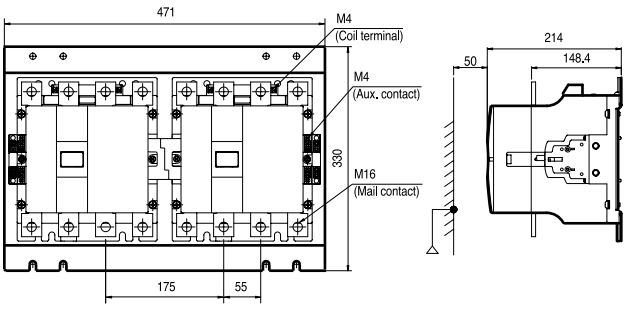	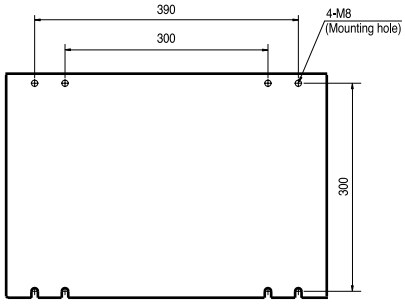 9.9kg
	GMC - 100/4~800/4	
Wiring diagram	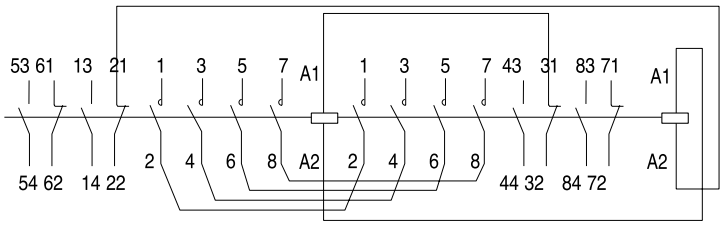	

Reversing contactors with TOR

GMS-9R~85R

Type	External	Mounting
GMS - 9R GMS - 12R GMS - 18R GMS - 22R	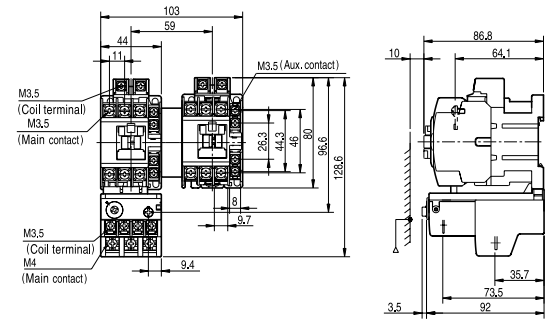	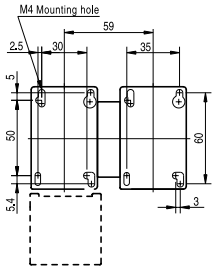 GMS-9R, 12R: 0.81kg GMS-18R, 22R: 0.89kg
GMS - 32R GMS - 40R	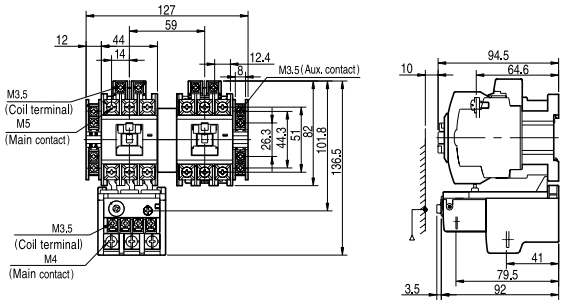	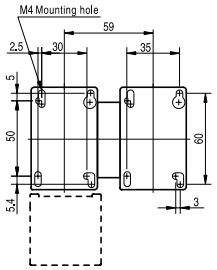 1.14kg
GMS - 50R GMS - 65R GMS - 75R GMS - 85R	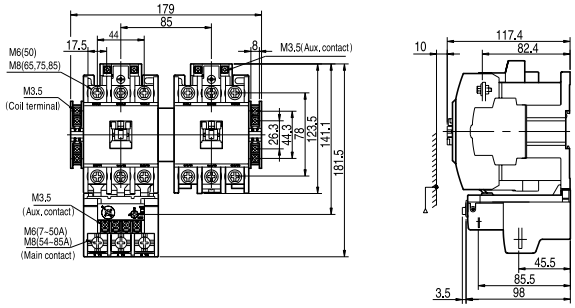	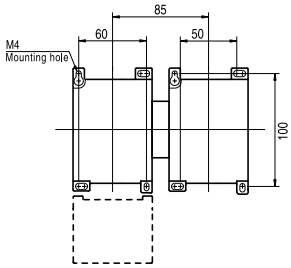 2.35kg

	GMS - 9R~22R	GMS - 32R~85R
Wiring diagram	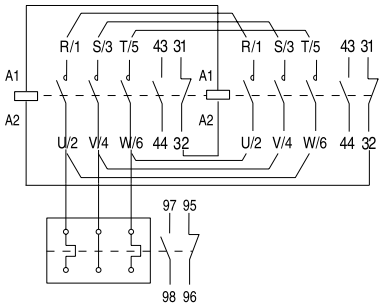	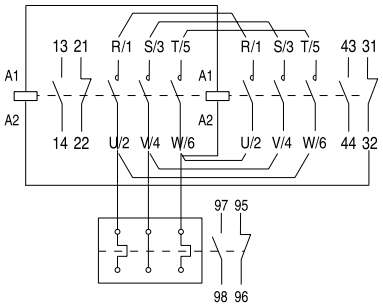

Reversing contactors with TOR

GMS-100R~400R

Type	External	Mounting
GMS - 100R GMS - 125R	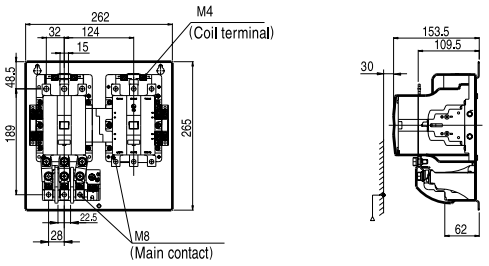	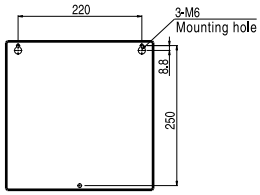 7.3kg
GMS - 150R	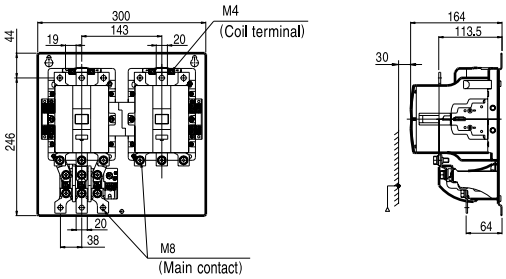	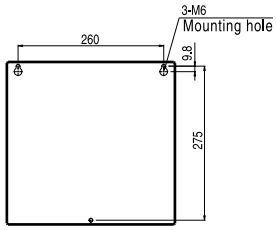 9kg
GMS - 180R GMS - 220R	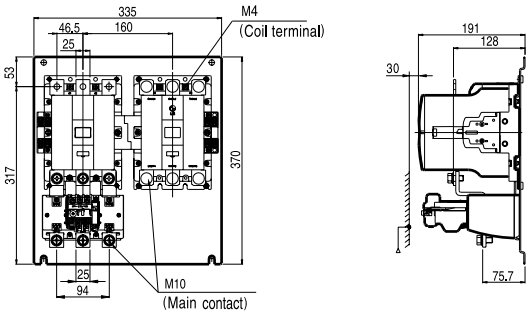	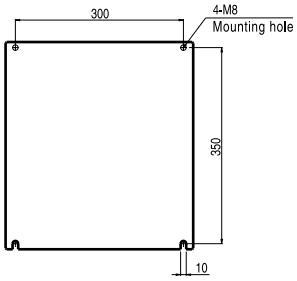 15.5kg
Wiring diagram	GMS-100R ~ 400R	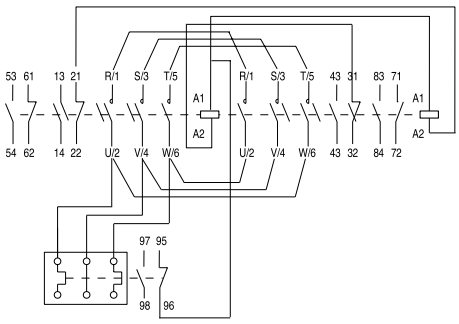

Reversing contactors with TOR

GMS-300R~800R

Type	External	Mounting
GMS - 300R GMS - 400R	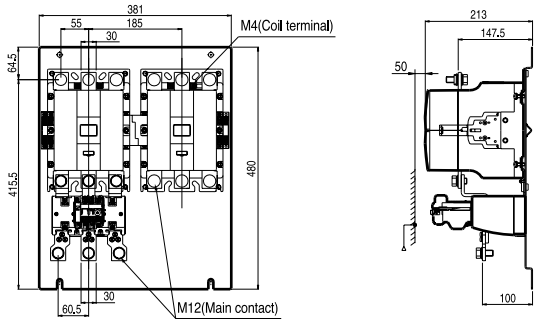	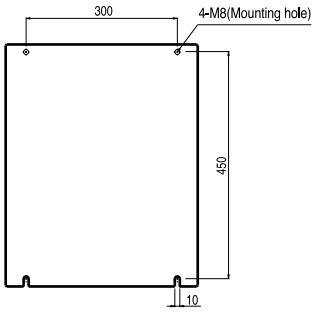 23kg
GMS - 600R GMS - 800R	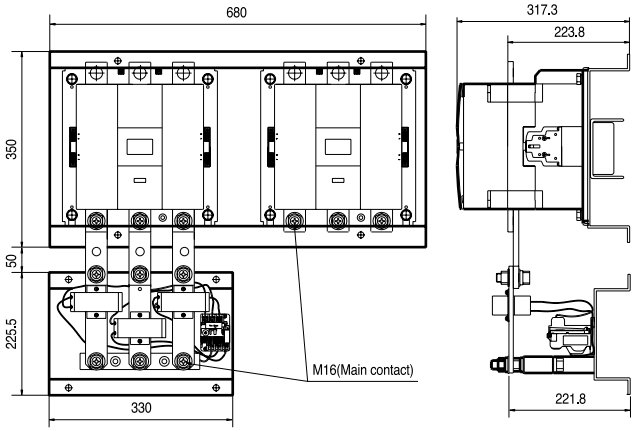	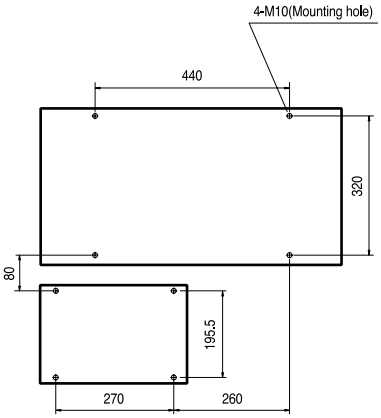
	GMS-100R ~ 400R	
Wiring diagram	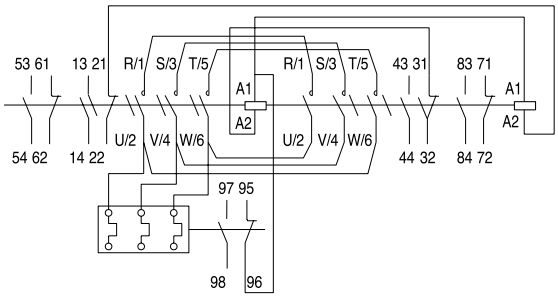	

Latching Contactors

GMC-9L~85L

Type	External	Mounting
GMC - 9L GMC - 12L GMC - 18L GMC - 22L	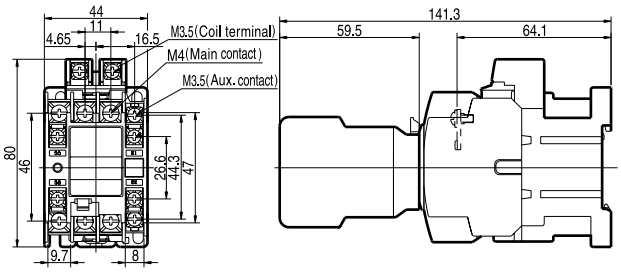	35mm Din-Rail 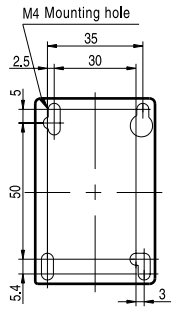 GMC-9L,12L:0.47kg GMC-18L,22L :0.51kg
GMC - 32L GMC - 40L	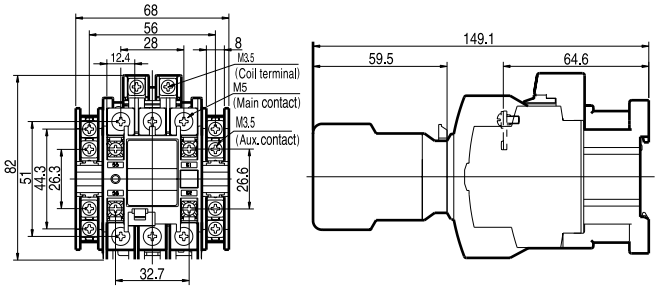	35mm Din-Rail 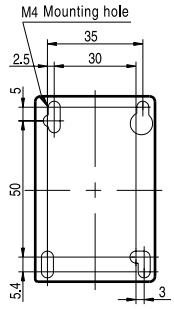 0.59kg
GMC - 50L GMC - 65L GMC - 75L GMC - 85L	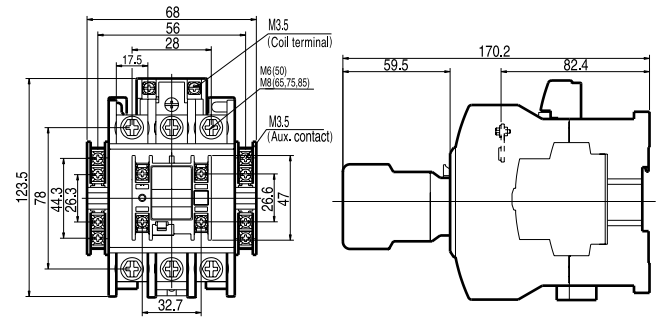	35mm Din-Rail 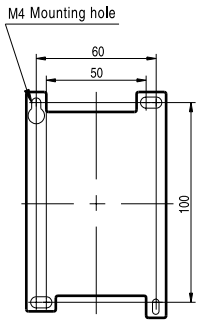 1.14kg

	GMC - 9L~22L	GMC - 32L~85L
Wiring diagram	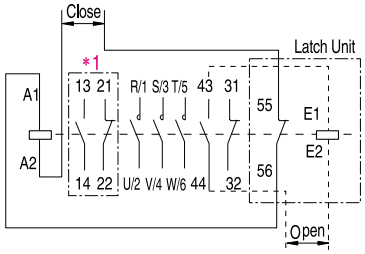 Note) *1. Aux. contacts 2NO 2NC	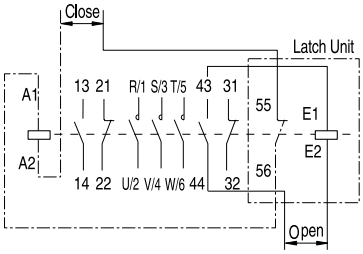

Latching Contactors

GMC-100L~ 400L

Type	External	Mounting
GMC - 100L GMC - 125L	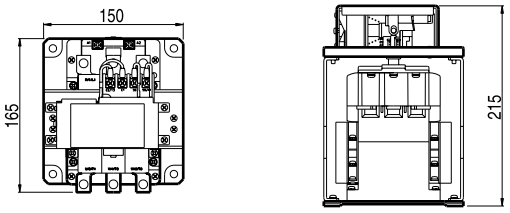	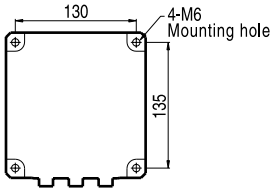 4.5kg
GMC - 150L	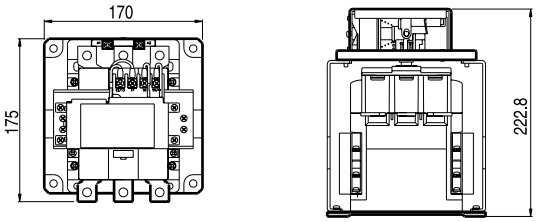	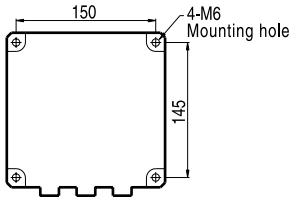 5.1kg
GMC - 180L GMC - 220L	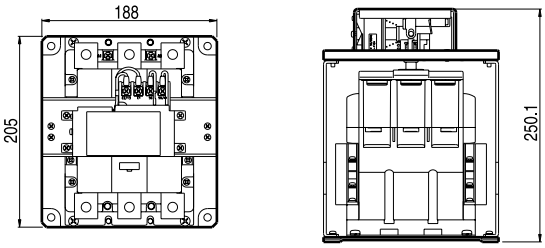	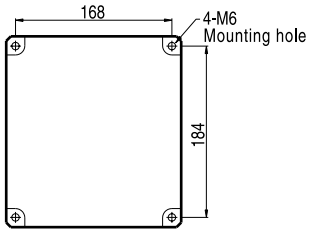 7.4kg
GMC - 300L GMC - 400L	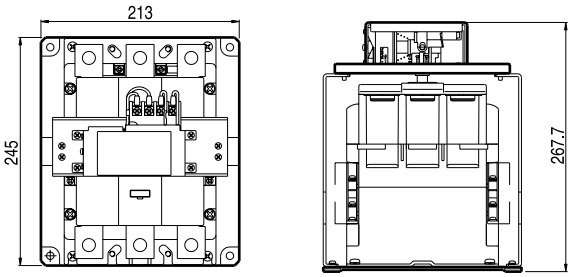	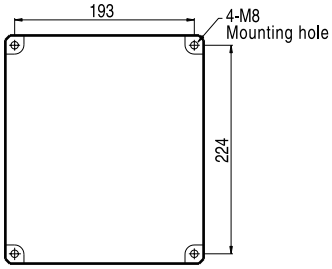 11.6kg
Wiring diagram	GMC-100L ~ 400L 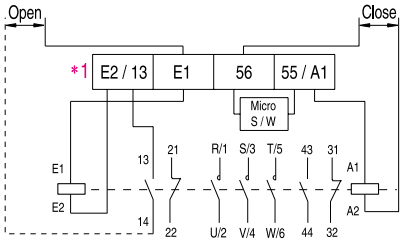 Note) *1. Customer wiring shown intermittent	

Contactors with delayed open device

AD-9~600

AD-9

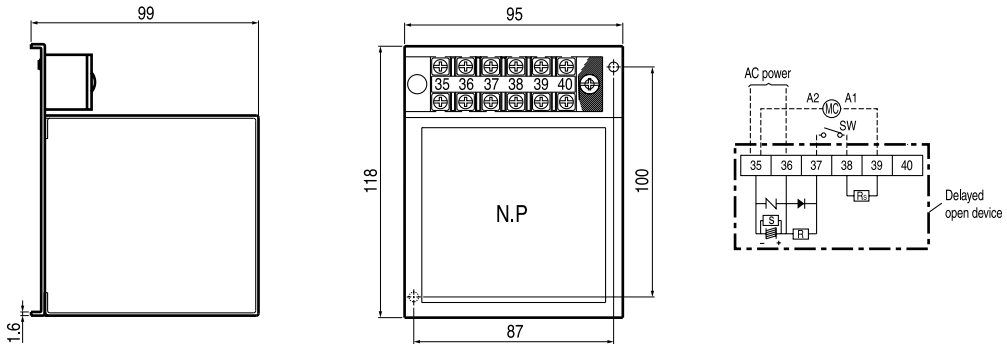

Weight : 0.85kg

AD-50
AD-100
AD-300
AD-600

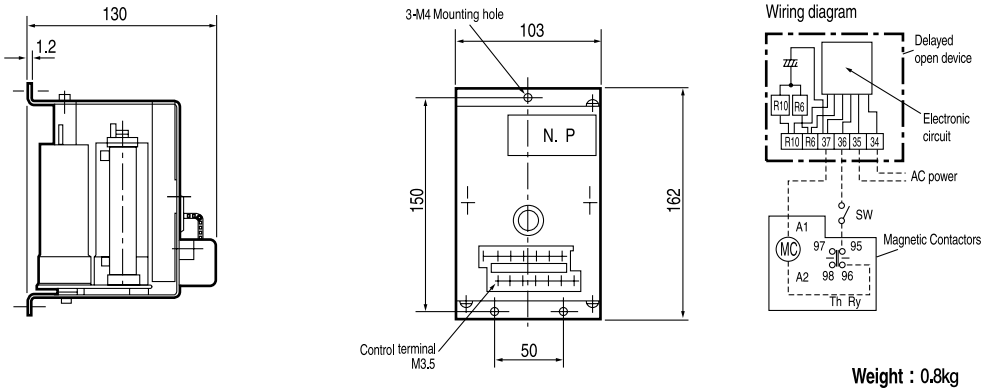

Weight : 0.8kg

Control circuit diagram

AD - 9	AD - 50 ~ 600
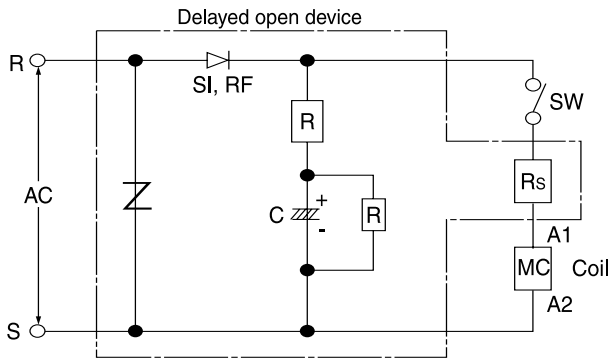	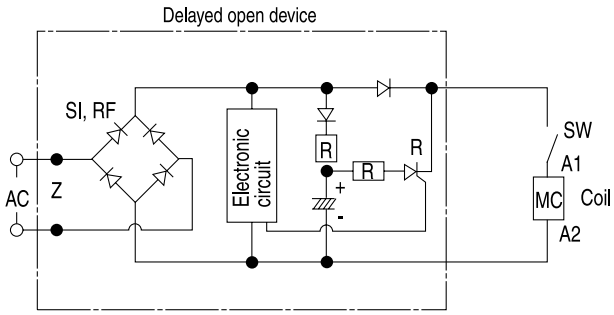

MC : Contactor
SW : Switch
SI, RF : Rectifier
C : Condenser
Rs : Resistance in series

Thermal overload relays

GTH(K)-22~85

Type	Dimensions	Wiring diagram
GTH(K) - 22	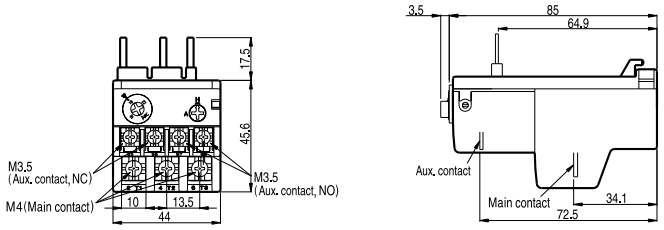	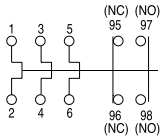 0.11Kg
GTH (K) - 40	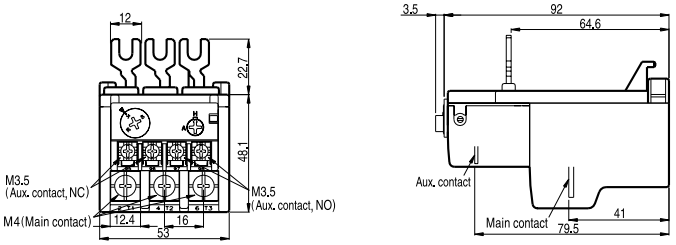	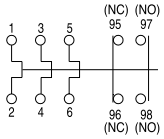 0.17Kg
GTH(K) - 85	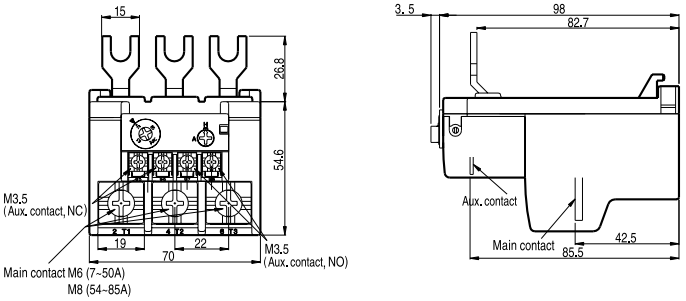	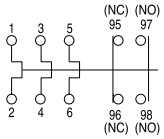 0.3Kg

TOR-DIN rail adapter kit

Type	Dimensions	
AZ-22H	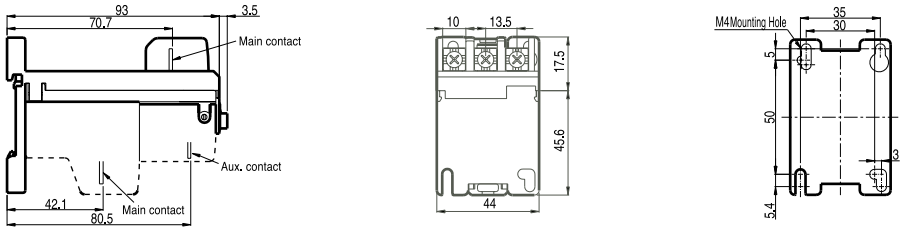	35mm Din-Rail 44g
AZ-40H	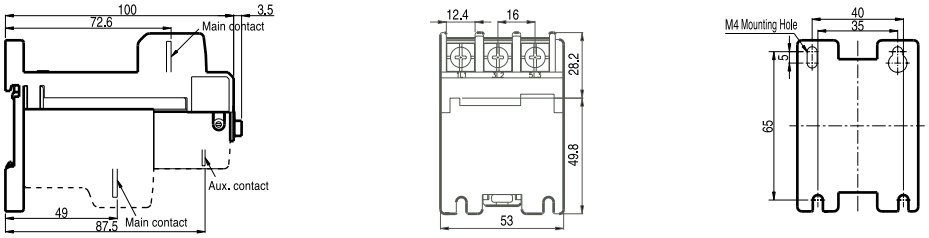	35mm Din-Rail 72g
AZ-85H	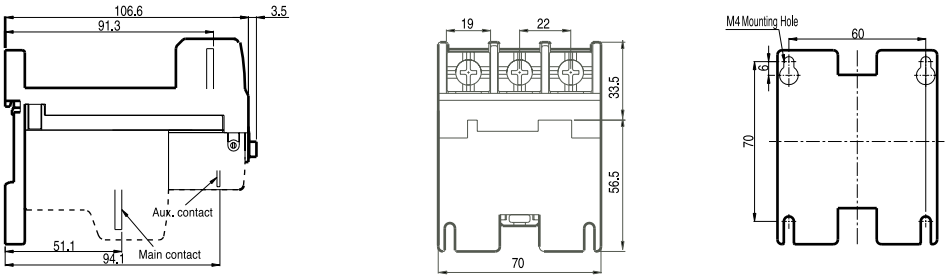	35mm Din-Rail 144g

Thermal overload relays

GTH(K)-100~600

Type	Dimensions	Wiring diagram
GTH(K) - 100	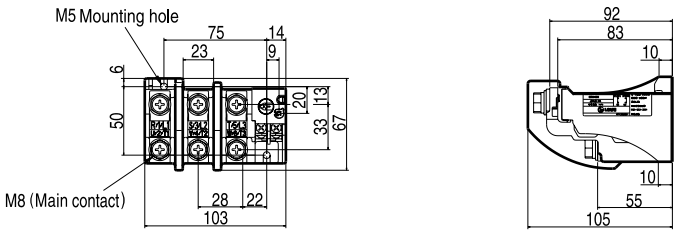	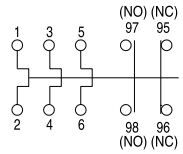 0.48Kg
GTH(K) - 150	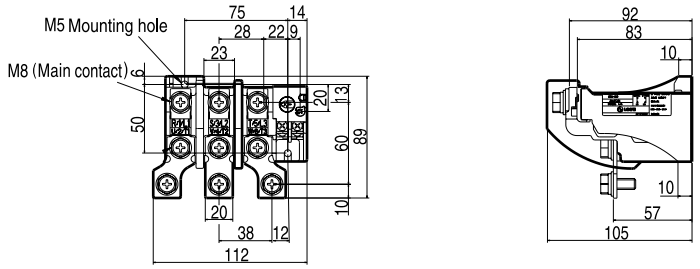	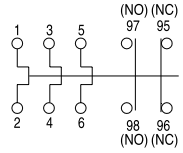 0.6Kg
GTH(K) - 220	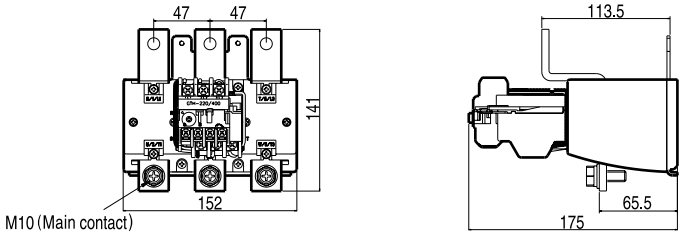	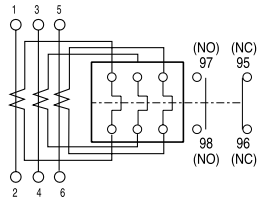 2.5Kg
GTH(K) - 400	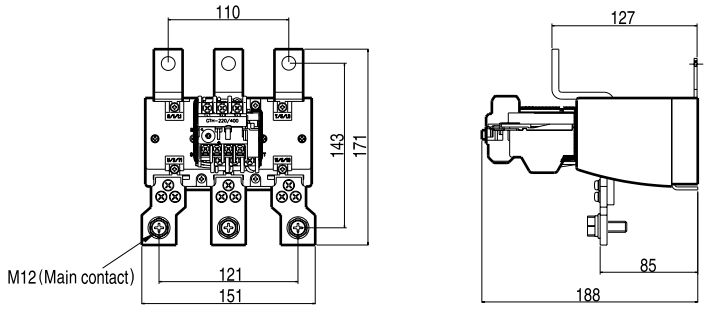	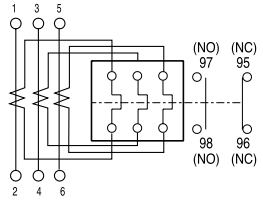 2.6Kg
GTH(K) - 600	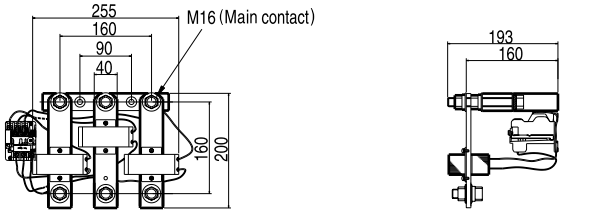	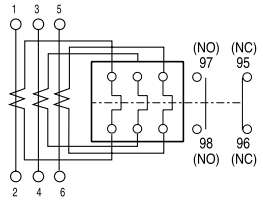 5.5Kg

Thermal overload relays (Class 20)

GTK-22/L~85/L

Type	Dimensions	Wiring diagram
GTK - 22/L	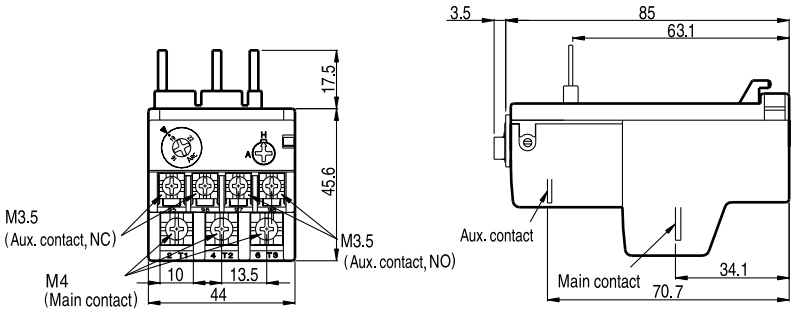	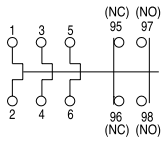 **0.11Kg**
GTK -40/L	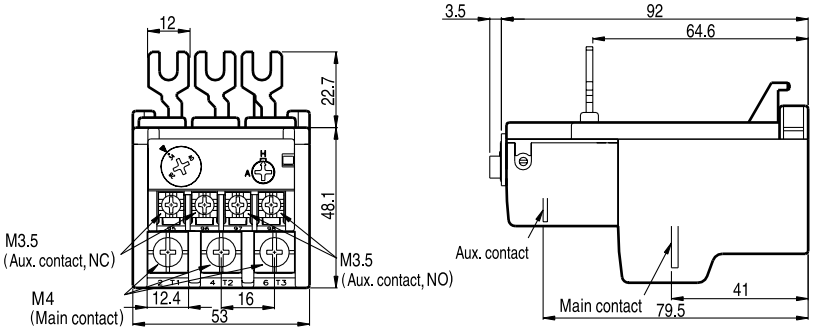	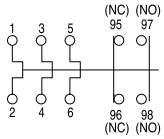 **0.17Kg**
GTK - 85/L	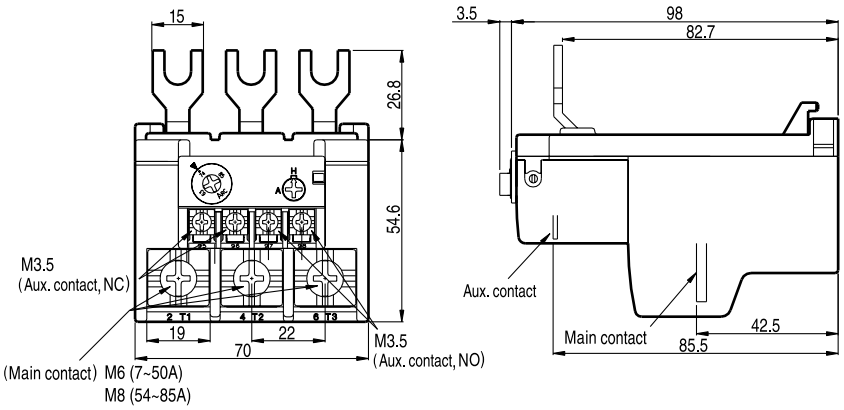	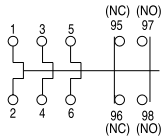 **0.3Kg**

Thermal overload relays (Class 20)

GTK-22/L~85/L

Type	Dimensions	Wiring diagram
GTK-100/L ~150/L	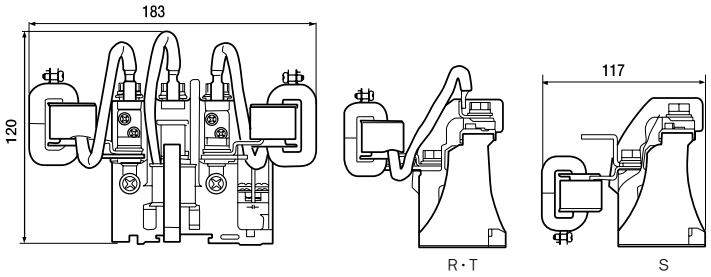	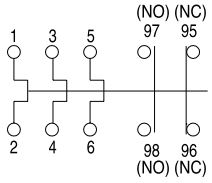 0.8Kg
GTK-220/L	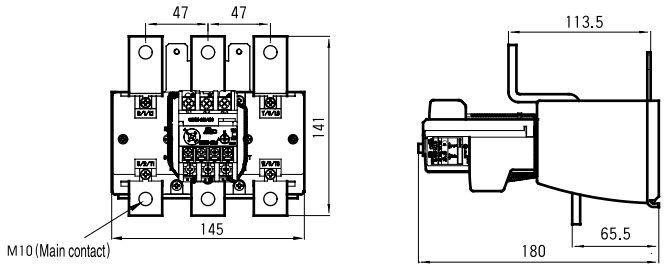	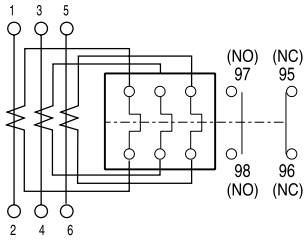 2.5Kg
GTK-400/L	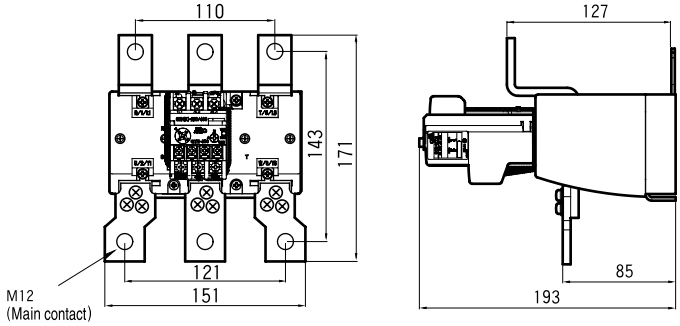	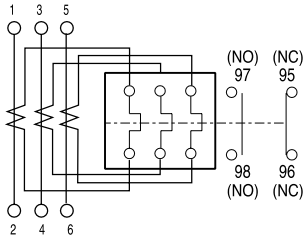 2.6Kg
GTK-600/L	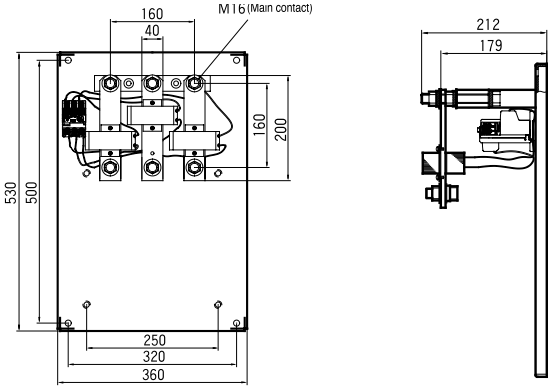	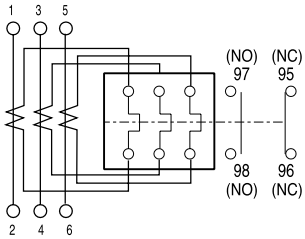 11.5Kg

2002-10

LG Industrial Systems

■ HEAD OFFICE

LG TWIN TOWERS, 20 Yoido-dong, Youngdungpo-gu,

Seoul, 150-721, Korea

Tel. (82-2)3777-4870

Fax. (82-2)3777-4713

http://www.lgis.com

LG constantly endeavor to improve our products
so that information in this catalog is subject to change without notice.

GMC 2002 / Oct. 2002 Printed in Korea STAFF

Global network

■ Dalian LG Industrial Systems Co.,Ltd China
- Address : No. 15 Liaohexi 3 Road, economic and technical development zone, Dalian, China
- Tel : 86-411-731-8210
- Fax : 86-411-730-7560
- e-mail : lgisppm@mail.dlptt.ln.cn

■ LG-VINA Industrial Systems Co.,Ltd Vietnam
- Address : LGIS VINA Congty che tao may dien Viet-Hung Dong Anh Hanoi, Vietnam
- Tel : 84-4-882-0222
- Fax : 84-4-882-0220
- e-mail : lgis-youn@hn.vnn.vn

■ LG Industrial Systems International Trading Co.,Ltd China
- Address : Room603, 6th Floor, Xiqun B/D, 88, Hedan Road, Waigaoqiao Free Trade Zone, Shanghai, China
- Tel : 8621-58681401,1402
- Fax : 8621-58681400
- e-mail : kjk202410@hanmail.net

■ LG Industrial Systems Beijing Office China
- Address : 6F North B/D, EAS 21 XIAO YUN ROAD, Dong San Huan Bei Road, Chao Yang District, Beijing, China
- Tel : 86-10-6462-3259/4
- Fax : 86-10-6462-3236
- e-mail : sclim@mx.cei.gov.cn

■ LG Industrial Systems Shanghai Office China
- Address : 12th Floor, Hi-tech King World, No. 668, Beijing Road(E), Shanghai, China
- Tel : 86-21-6240-3477
- Fax : 86-21-6252-1399
- e-mail : ijkim1005@hanmail.net

■ LG Industrial Systems Guangzhou Office China
- Address : Guangzhou Xibu Rm.613, Metro plaza 183 Tian Huabei Rd., Guangzhou, PRC, P/code:510620
- Tel : 86-20-8755-3429
- Fax : 86-20-8755-3408
- e-mail : lgisgz@public1.guangzhou.gd.cn

■ LG Industrial Systems New Jersey Office USA
- Address : 1000 Sylvan Avenue, Englewood Cliffs, New Jersey 07632 USA
- Tel : 1-201-816-2985
- Fax : 1-201-816-2343
- e-mail : hskim@lgisusa.com

■ LG Industrial Systems Tokyo Office Japan
- Address : 16F, Higashi-Kan, Akasaka Twin Towers 17-22, 2-chome, Akasaka, Minato-ku Tokyo 107-0052, Japan
- Tel : 81-3-3582-9126
- Fax : 81-3-3582-0062
- e-mail : snbaek@partner.lgis.co.jp